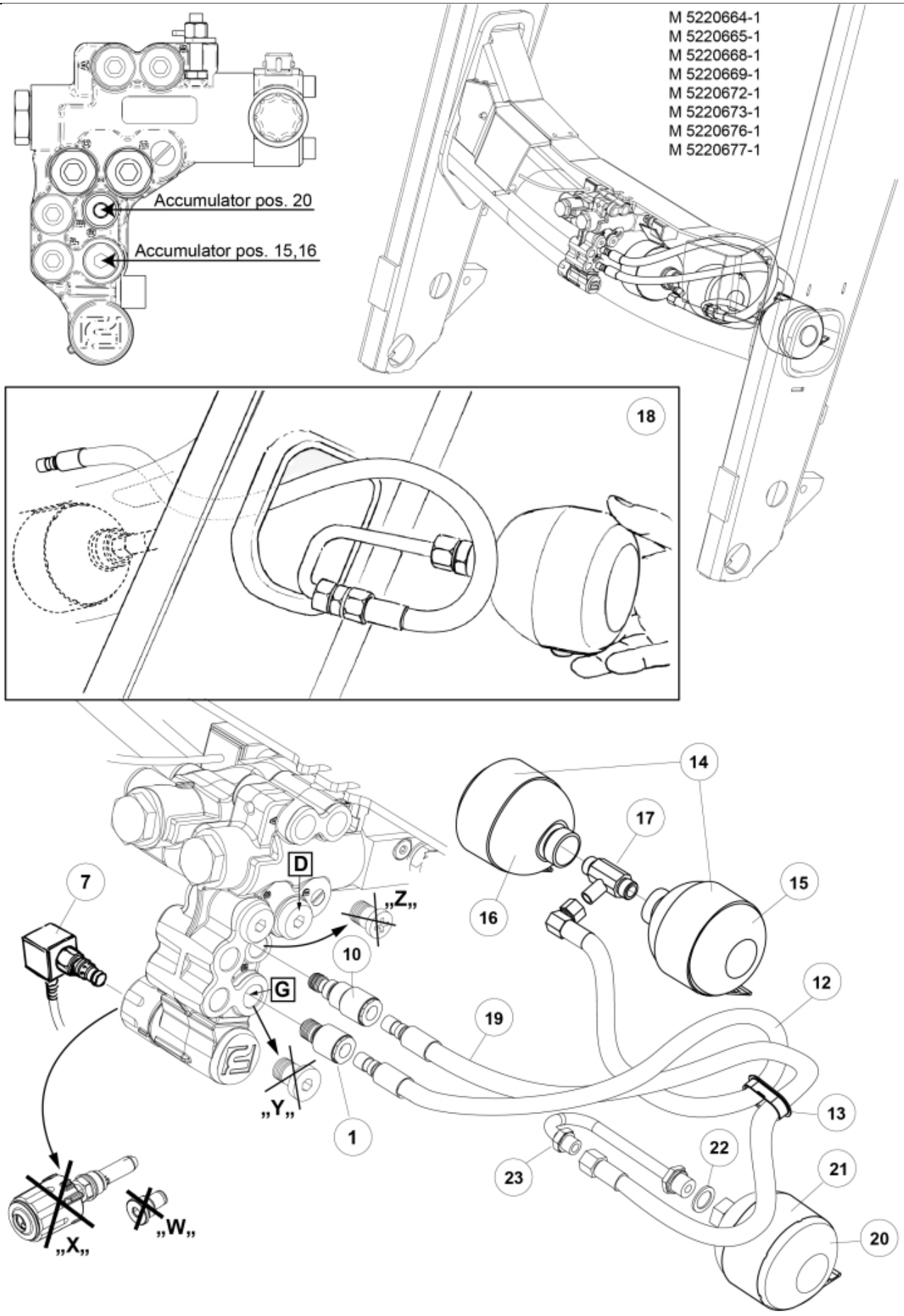
M 5220664-1
M 5220665-1
M 5220668-1
M 5220669-1
M 5220672-1
M 5220673-1
M 5220676-1
M 5220677-1
Accumulator pos. 20
Accumulator pos. 15,16
18
14
17
15
16
D
„Z„
7
10
G
12
19
„Y„
1
13
22
23
21
20
„X„
„W„

© 2025 Jost

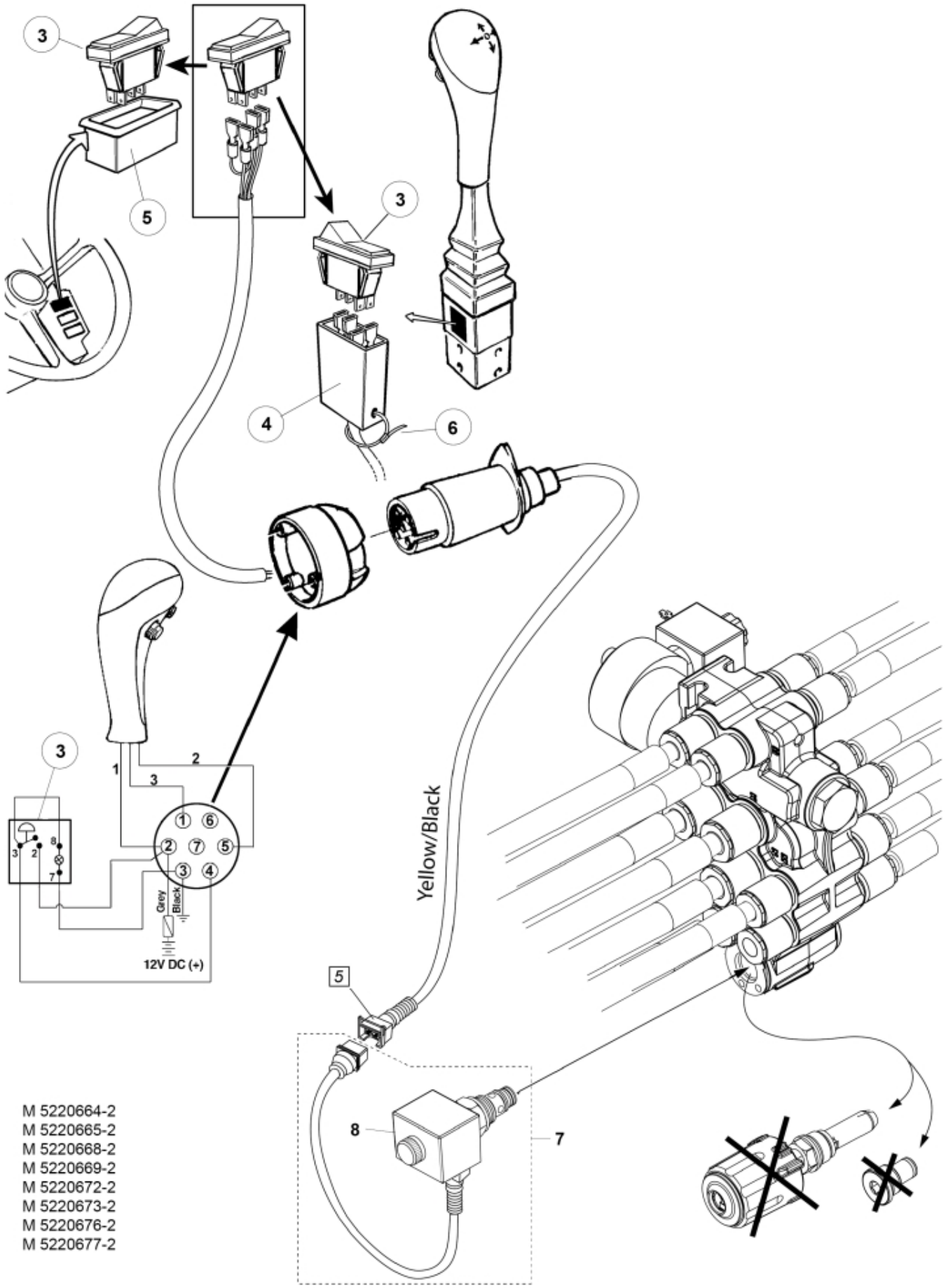

M 5220664-2
M 5220665-2
M 5220668-2
M 5220669-2
M 5220672-2
M 5220673-2
M 5220676-2
M 5220677-2

© 2025 Jost

Description	2 acc + Minus
Part assemblies	Suspension El.
Specification	Serial number from: 7332744

PartNo	Pos	Qty	Name	Specifications
5220668		1 PCS	Suspension El.	7332744
9031324	1	1	Coupling	3/8"
5201082	3	1 PCS	Switch	
5201086	4	1	Bracket	
5103005	5	1	Frame	
5033621	6	10	Cable tie	4.6x150
10550264	7	1 PCS	Valve cpl.	
60062558	8	1 PCS	• Coil	
11120622	10	1 PCS	Adaptor	
9031320	11	11 PCS	SoftDrive	
9031147	12	1	• Hose	3/8" L=800mm
5215111	13	1	• Edge cover	
5215012	14	2	• Bracket	
5045140	15	1	• Accumulator	
5045140	16	1	• Accumulator	
11120516	17	1	• T-Adapter	
9031891	18	1 PCS	SoftDrive	
9031870	19	1 PCS	• Hose	3/8" L=580mm
5034102	20	1	• Accumulator	
5215011	21	1	• Bracket	
5013853	22	1	• Dowty washer	Tredo 1/2", Part is included in kit 60007907 Hose cpl., 9032177 Hose cpl.
11120620	23	1 PCS	• Adaptor	

© 2025 Jost