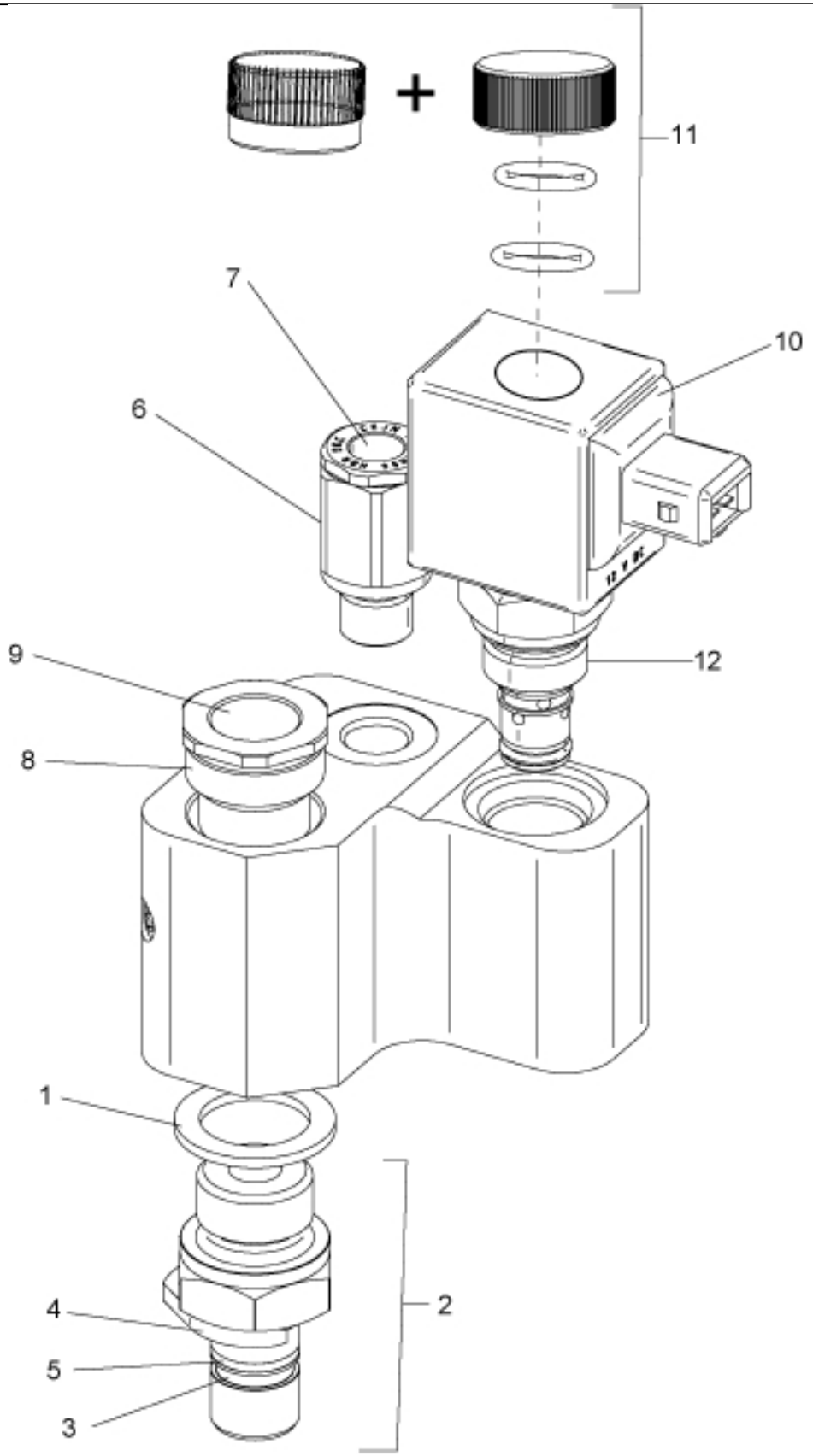

r10550456

© 2025 Jost

Part assemblies Valve

PartNo	Pos	Qty	Name	Specifications
5013853	1	1	Dowty washer	Tredo 1/2", Part is included in kit 60007907 Hose cpl., 9032177 Hose cpl.
5028061	2	1	Coupling	
5028012	3	1 PCS	• Release ring	1/2" 10 pcs/bag
5028010	4	1 PCS	• Assembly stop	1/2" 10 pcs/bag
4500385	5	1 PCS	• O-ring kit	1/2" 10 pcs/bag
4500390	6	1	Coupling	
4500386	7	1	• Seal kit	WEO 1/4" 10 kits/bag
5028067	8	1	Coupling	
4500388	9	1	• Seal kit	WEO 1/2" 10 kits/bag
10550394	10	1 PCS	Solenoid	
5034116	11	1 PCS	Nut	
10550395	12	1 PCS	Cartridge valve	

© 2025 Jost