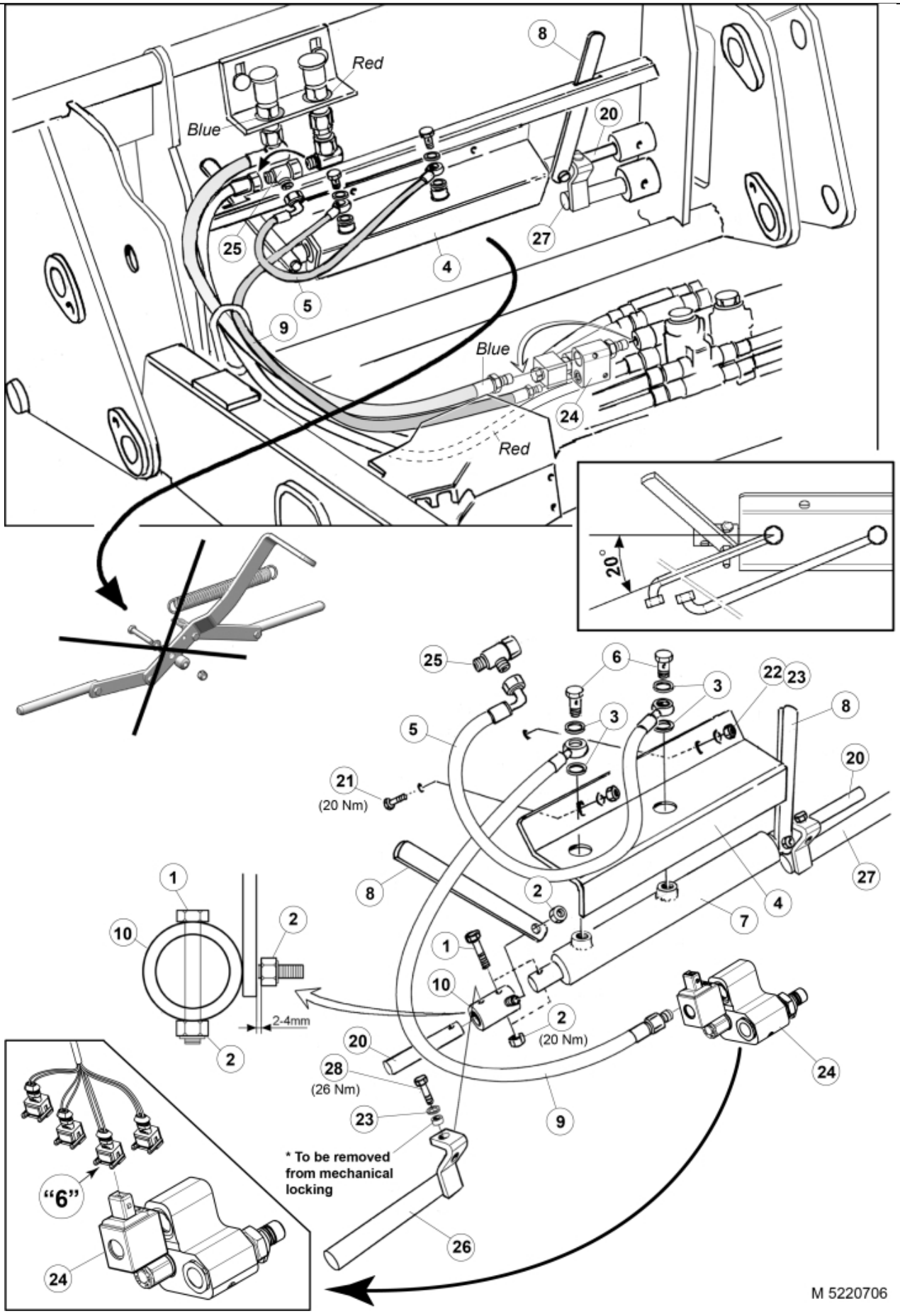
Red
Blue
8
20
27
25
4
5
9
Blue
24
Red
20°
25
6
3
22
23
3
8
5
20
21
(20 Nm)
8
2
27
4
7
1
10
2
2-4mm
2
1
10
2
(20 Nm)
24
20
28
(26 Nm)
23
9
* To be removed from mechanical locking
26
"6"
24
M 5220706

© 2025 Jost

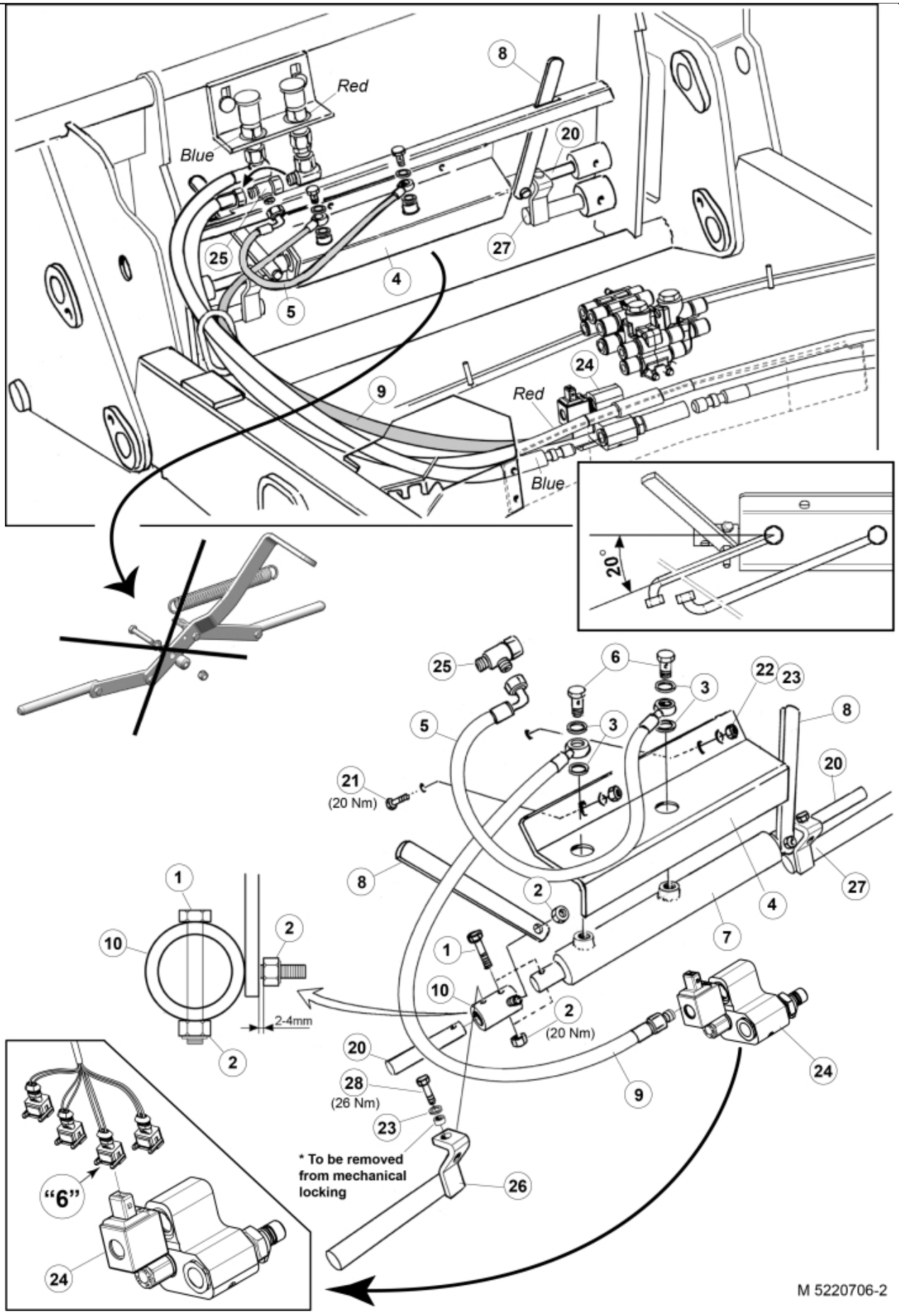
Red
Blue
8
20
25
27
4
5
24
9
Red
Blue
20°
25
6
22
23
3
3
5
8
20
21
(20 Nm)
8
2
4
27
7
1
10
2
2-4mm
1
10
2
(20 Nm)
24
20
28
(26 Nm)
23
9
* To be removed from mechanical locking
26
"6"
24
M 5220706-2

© 2025 Jost

Part assemblies		Implement lock LCS		
Specification		Serial number from: 7332744		
PartNo	**Pos**	**Qty**	**Name**	**Specifications**
5220706		1 PCS	Implement lock LCS	7332744
5219242		1	Locking kit	6+8 DM
5002055	1	2	•• Screw	M6S M8x40
5011553	2	4	•• Nut	M6M M8 Loc-king
5013856	3	4	•• Dowty washer	Tredo 1/4"
5219243	4	1	•• Protection plate	
60000143	5	1 PCS	•• Hose	1/4" L=550mm (9031170)
1120166	6	2	•• Banjo fitting	R1/4"
12713210	7	1	•• Cylinder	Ø25/16 L=370-590 Lock cyl.
60005579		1	••• Seal kit	Implement lock. cyl.
5219049	8	2	•• Indicator	
60000135	9	1 PCS	•• Hose	1/4" L=1100mm (9031482)
5219240	10	2	•• Sleeve	
5219044	20	2	Pin	D=20mm
5002077	21	2	Screw	M6S 10x30
5011554	22	2	Nut	Loc-King M10
5013110	23	2	Washer	BRB 10.5x22x2
10550455	24	1 PCS	Valve	
5027454	25	1	L-coupling	
5219230	26	1	Pin LH	D=30mm
5219231	27	1	Pin RH	D=30mm
5002972	28	2	Screw	M6S 10x40 Driloc
5219100	*	2	Spacer	
5102112		1	Safety switch cpl.	

© 2025 Jost