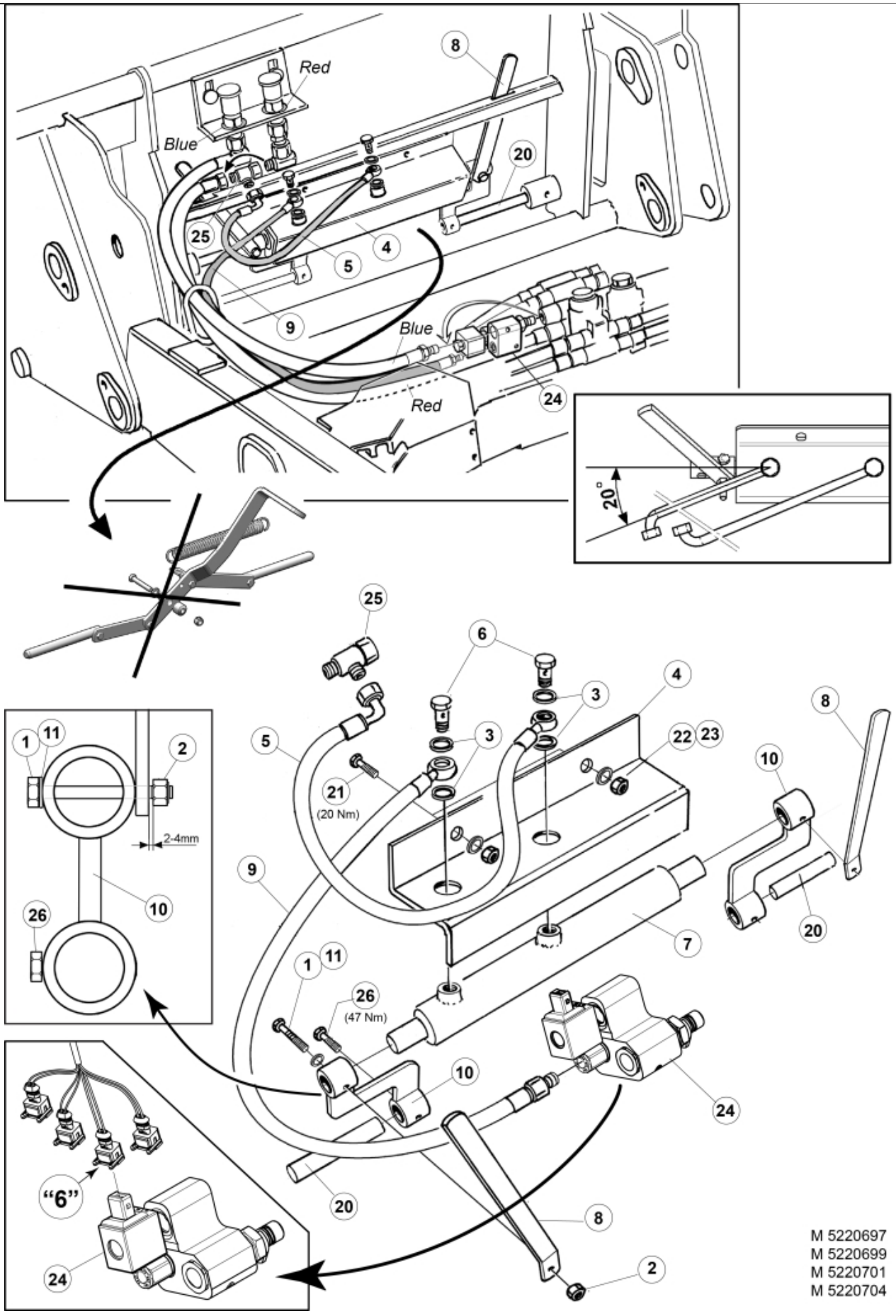
Red
Blue
8
20
25
4
5
9
Blue
Red
24
20°
25
6
3
4
5
3
22
23
8
10
21
(20 Nm)
9
7
20
1
11
26
(47 Nm)
10
24
20
8
2
1
11
2
2-4mm
26
10
"6"
24
M 5220697
M 5220699
M 5220701
M 5220704

© 2025 Jost

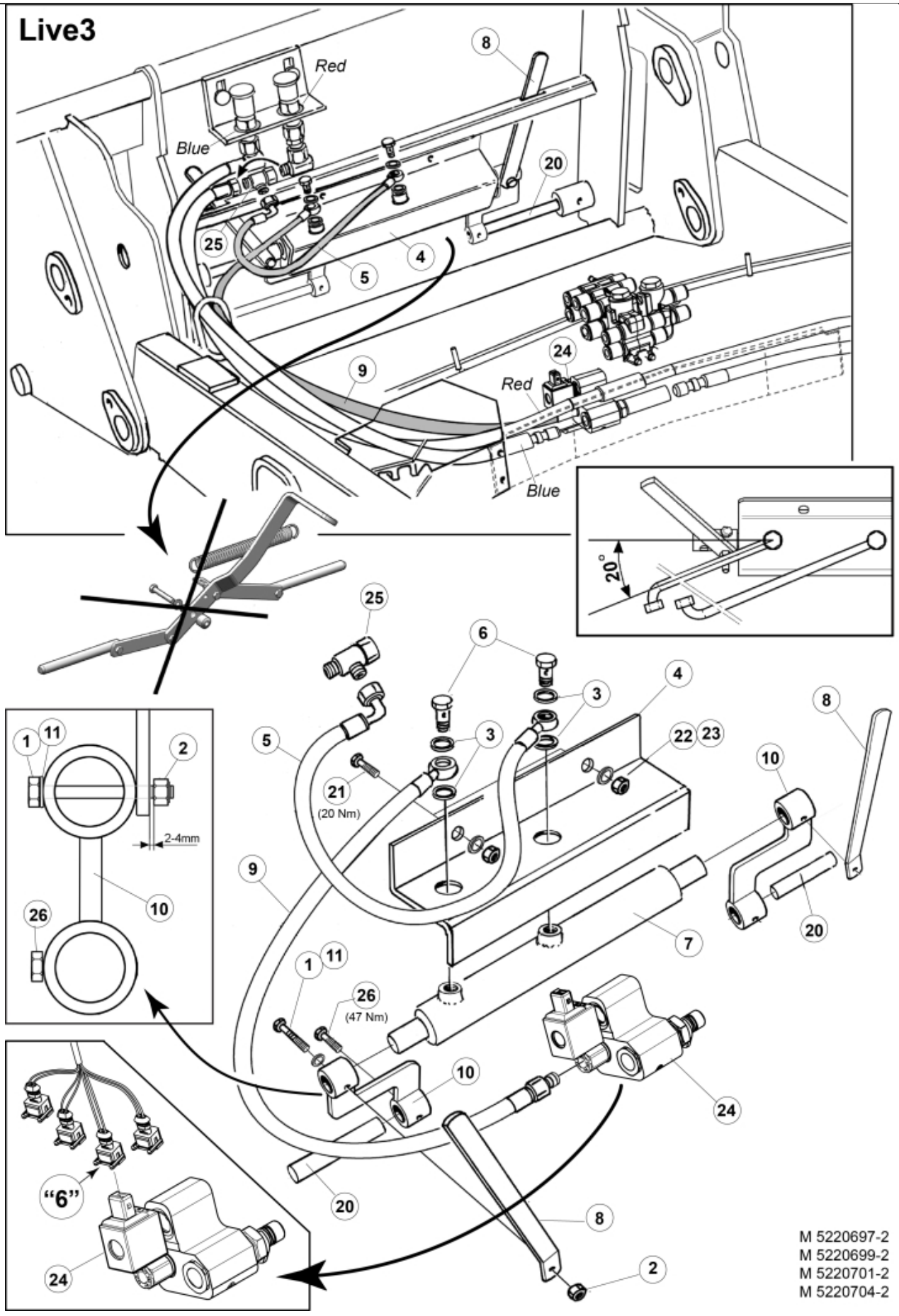
Live3
Red
Blue
8
20
25
4
5
9
24
Red
Blue
20°
25
6
3
4
3
5
22
23
8
10
21
(20 Nm)
9
7
20
1
11
26
(47 Nm)
10
24
20
8
2
1
11
2
2-4mm
10
26
"6"
24
M 5220697-2
M 5220699-2
M 5220701-2
M 5220704-2

© 2025 Jost

Part assemblies Implement lock

PartNo	Pos	Qty	Name	Specifications
5220701		1 PCS	Implement lock	
5219346		1	Locking kit	3+8 DS
5002056	1	2	•• Screw	M6S 8 x 50
5011553	2	4	•• Nut	M6M M8 Loc-king
5013856	3	4	•• Dowty washer	Tredo 1/4"
5219343	4	1	•• Protection plate	
60000143	5	1 PCS	•• Hose	1/4" L=550mm (9031170)
1120166	6	2	•• Banjo fitting	R1/4"
12713210	7	1	•• Cylinder	Ø25/16 L=370-590 Lock cyl.
60005579		1	••• Seal kit	Implement lock. cyl.
5219154	8	2	•• Indicator	
60000196	9	1 PCS	•• Hose	1/4" L=1000mm (9031481)
5219145	10	2	•• Adaptor	
5013101	11	2	•• Washer	BRB 8,4 x 16
5219330	20	2	Pin	D=20mm
5002077	21	2	Screw	M6S 10x30
5011554	22	2	Nut	Loc-King M10
5013110	23	2	Washer	BRB 10.5x22x2
10550455	24	1 PCS	Valve	
5027454	25	1	L-coupling	
5002971	26	2	Screw	M6S 10x30 Drilock
5033992		1	Safety switch cpl.	Replaces 5033991

© 2025 Jost