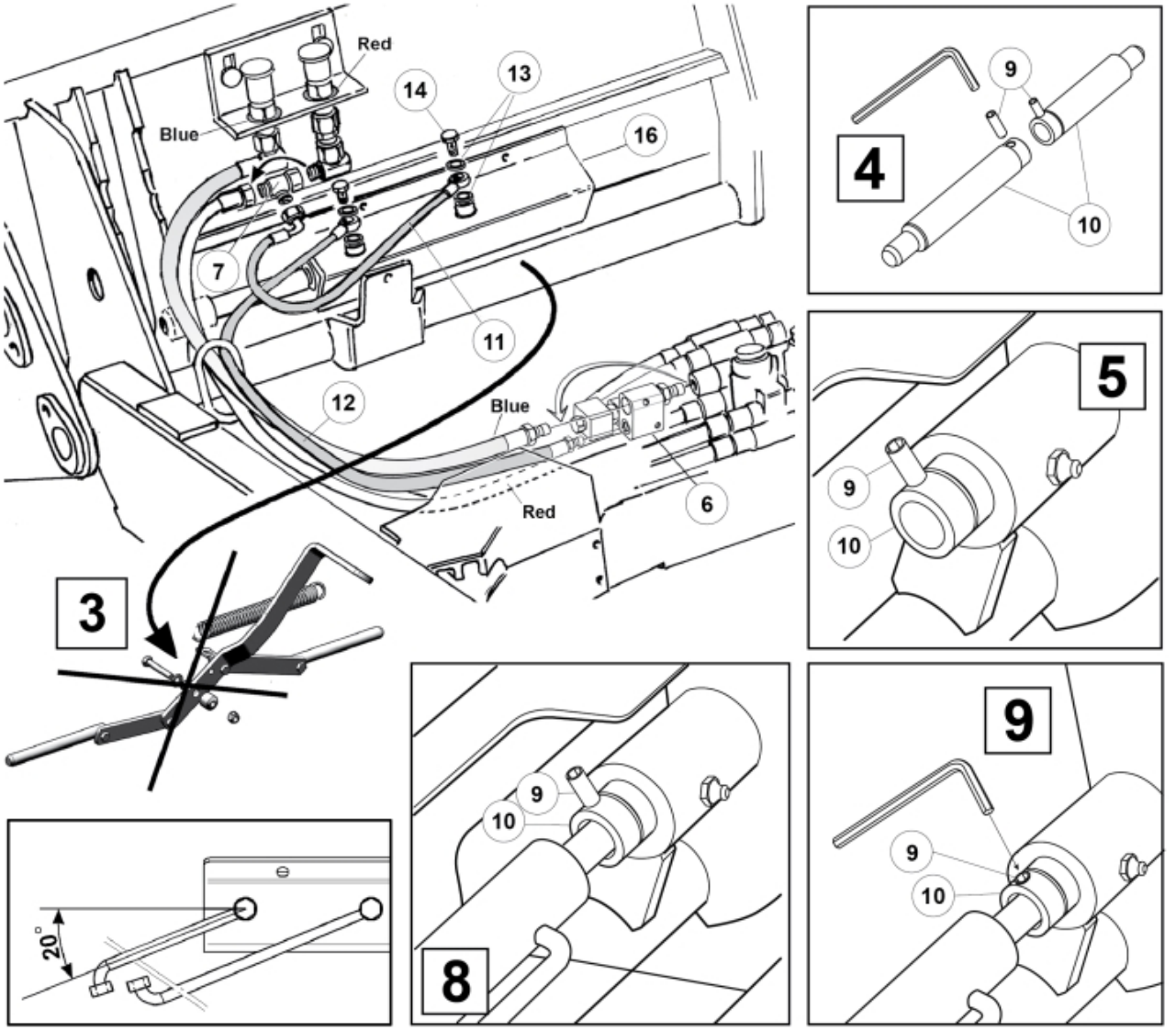
Red
Blue
14
13
16
7
11
12
Blue
Red
6
3
4
9
10
5
9
10
20°
8
9
10
9
10

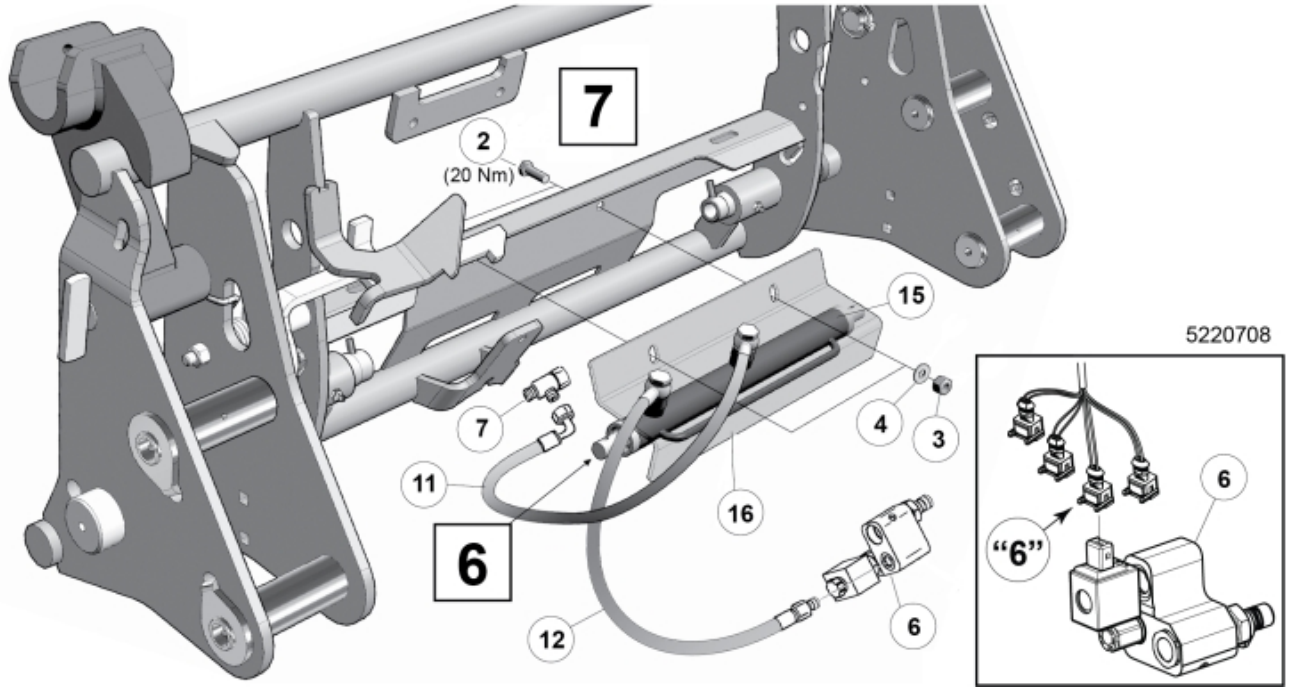
7
2
(20 Nm)
15
5220708
7
4
3
11
16
6
12
6
6
"6"

© 2025 Jost

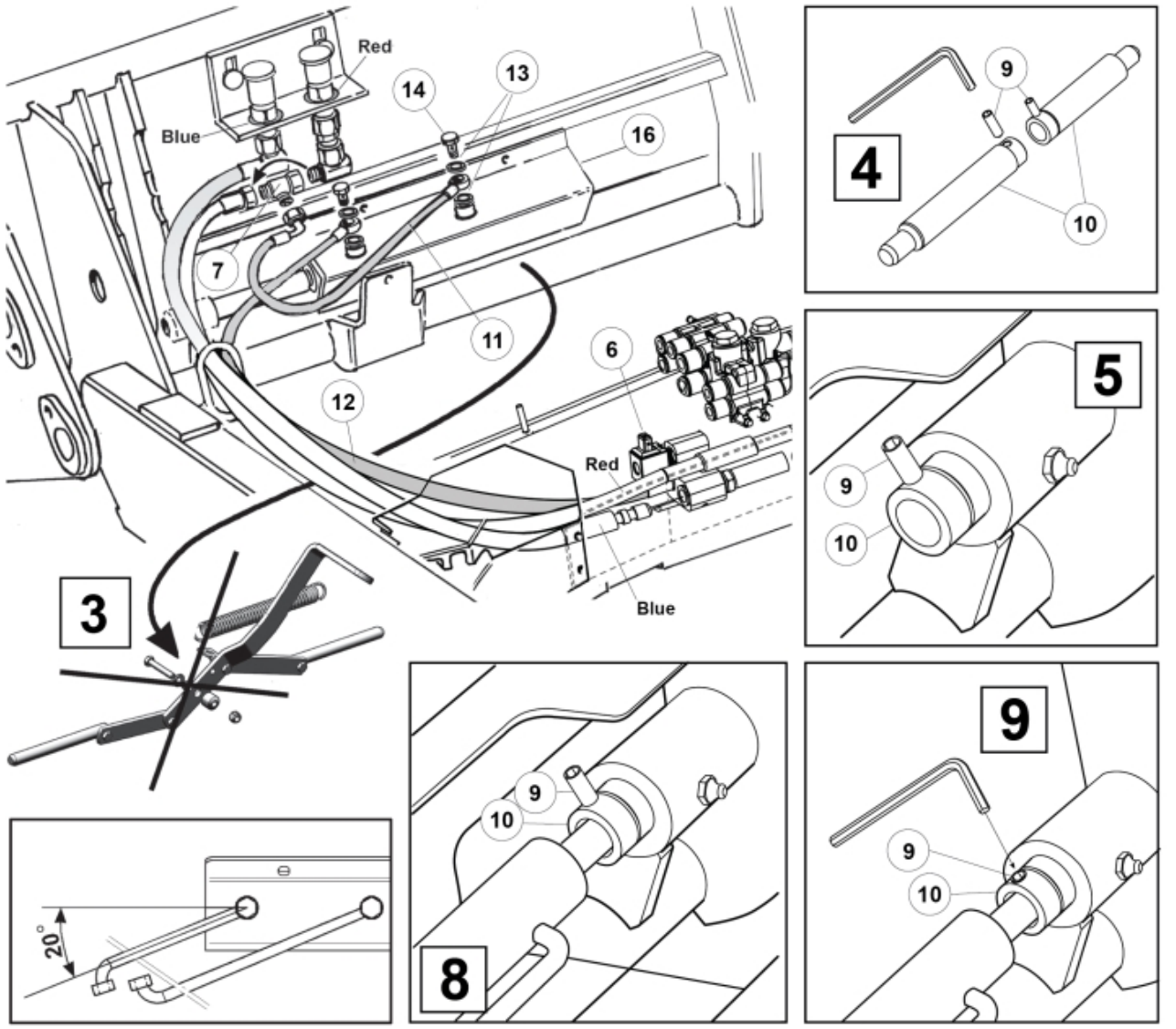
Red
Blue
14
13
16
7
11
6
12
Red
Blue
3
4
9
10
5
9
10
20°
8
9
10
9
9
10

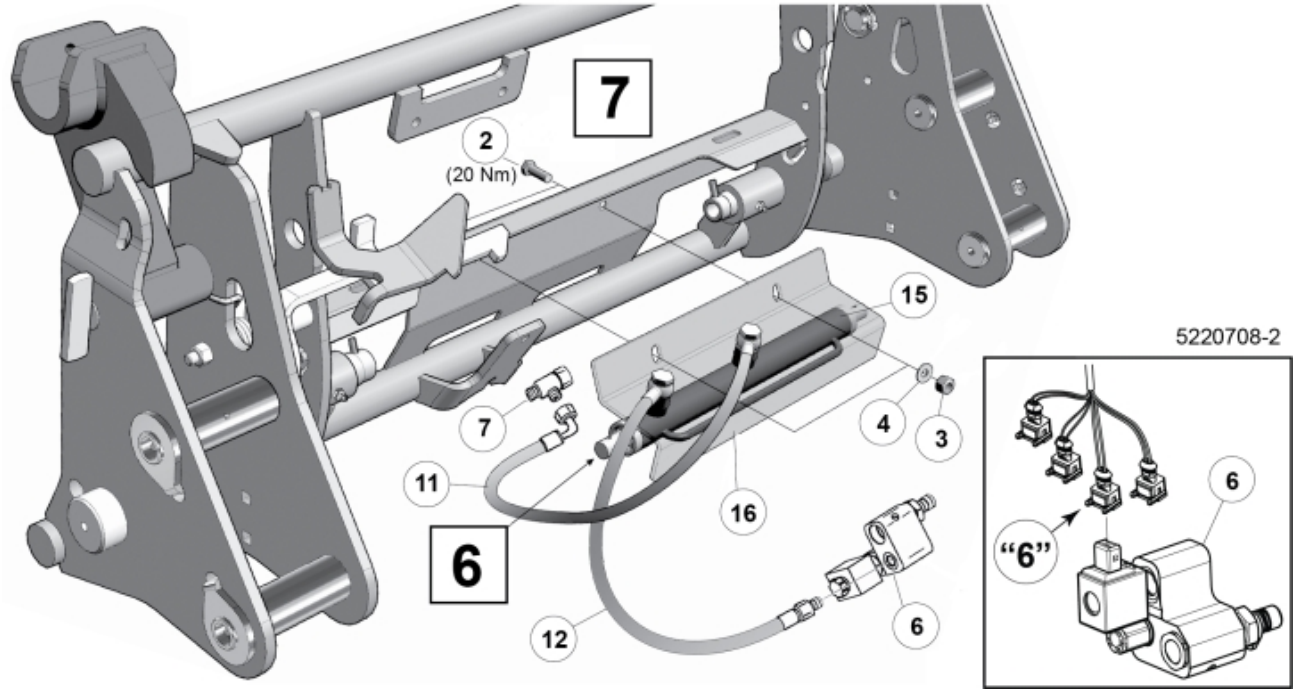
7
2
(20 Nm)
15
5220708-2
7
4
3
11
16
6
12
6
6
"6"

© 2025 Jost

Part assemblies		Implement lock LCS		
Specification		Serial number from: 7332744		
PartNo	**Pos**	**Qty**	**Name**	**Specifications**
5220708			Implement lock LCS	7332744
5002077	2	2	Screw	M6S 10x30
5011554	3	2	Nut	Loc-King M10
5013110	4	2	Washer	BRB 10.5x22x2
10550455	6	1 PCS	Valve	
5027454	7	1	L-coupling	
60028680	9	2	Screw	M8x25
5220492	10	2	Pin	
5220490		1	Locking kit	
60000143	11	1 PCS	• Hose	1/4" L=550mm (9031170)
60000135	12	1 PCS	• Hose	1/4" L=1100mm (9031482)
5013856	13	4	• Dowty washer	Tredo 1/4"
1120166	14	2	• Banjo fitting	R1/4"
12713210	15	1	• Cylinder	Ø25/16 L=370-590 Lock cyl.
60005579		1	•• Seal kit	Implement lock. cyl.
5219048	16	1	• Protection plate	
5033992			Safety switch cpl.	Replaces 5033991

© 2025 Jost