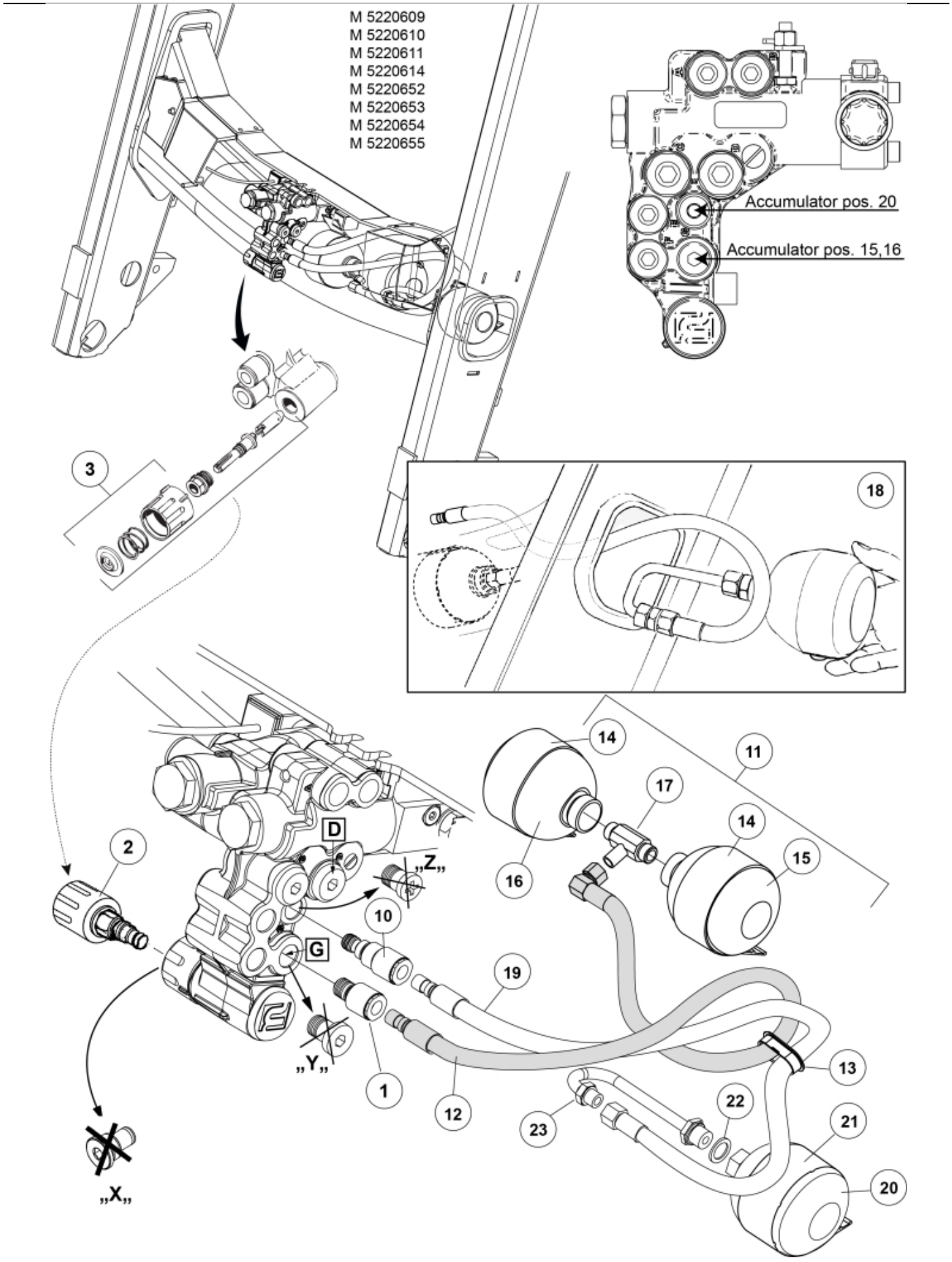
M 5220609
M 5220610
M 5220611
M 5220614
M 5220652
M 5220653
M 5220654
M 5220655
Accumulator pos. 20
Accumulator pos. 15,16
3
18
14
11
17
14
15
16
2
D
„Z„
10
G
19
„Y„
1
12
23
22
21
13
20
„X„


© 2025 Jost

| | |
|---|---|
| **Description** | 2 acc + Minus |
| **Part assemblies** | Suspension Man. |
| **Specification** | Serial number from: 7332744 |

| PartNo | Pos | Qty | Name | Specifications |
|---|---|---|---|---|
| 5220609 | | 1 PCS | Suspension Man. | 7332744 |
| 9031324 | 1 | 1 | Coupling | 3/8" |
| 10550326 | 2 | 1 | Shut-off valve | |
| 10550327 | 3 | 1 PCS | • Knob | |
| 11120622 | 10 | 1 PCS | Adaptor | |
| 9031320 | 11 | 1 PCS | SoftDrive | |
| 9031147 | 12 | 1 | • Hose | 3/8" L=800mm |
| 5215111 | 13 | 1 | • Edge cover | |
| 5215012 | 14 | 2 | • Bracket | |
| 5045140 | 15 | 1 | • Accumulator | |
| 5045140 | 16 | 1 | • Accumulator | |
| 11120516 | 17 | 1 | • T-Adapter | |
| 9031891 | 18 | 1 PCS | SoftDrive | |
| 9031870 | 19 | 1 PCS | • Hose | 3/8" L=580mm |
| 5034102 | 20 | 1 | • Accumulator | |
| 5215011 | 21 | 1 | • Bracket | |
| 5013853 | 22 | 1 | • Dowty washer | Tredo 1/2", Part is included in kit 60007907 Hose cpl., 9032177 Hose cpl. |
| 11120620 | 23 | 1 PCS | • Adaptor | |


© 2025 Jost