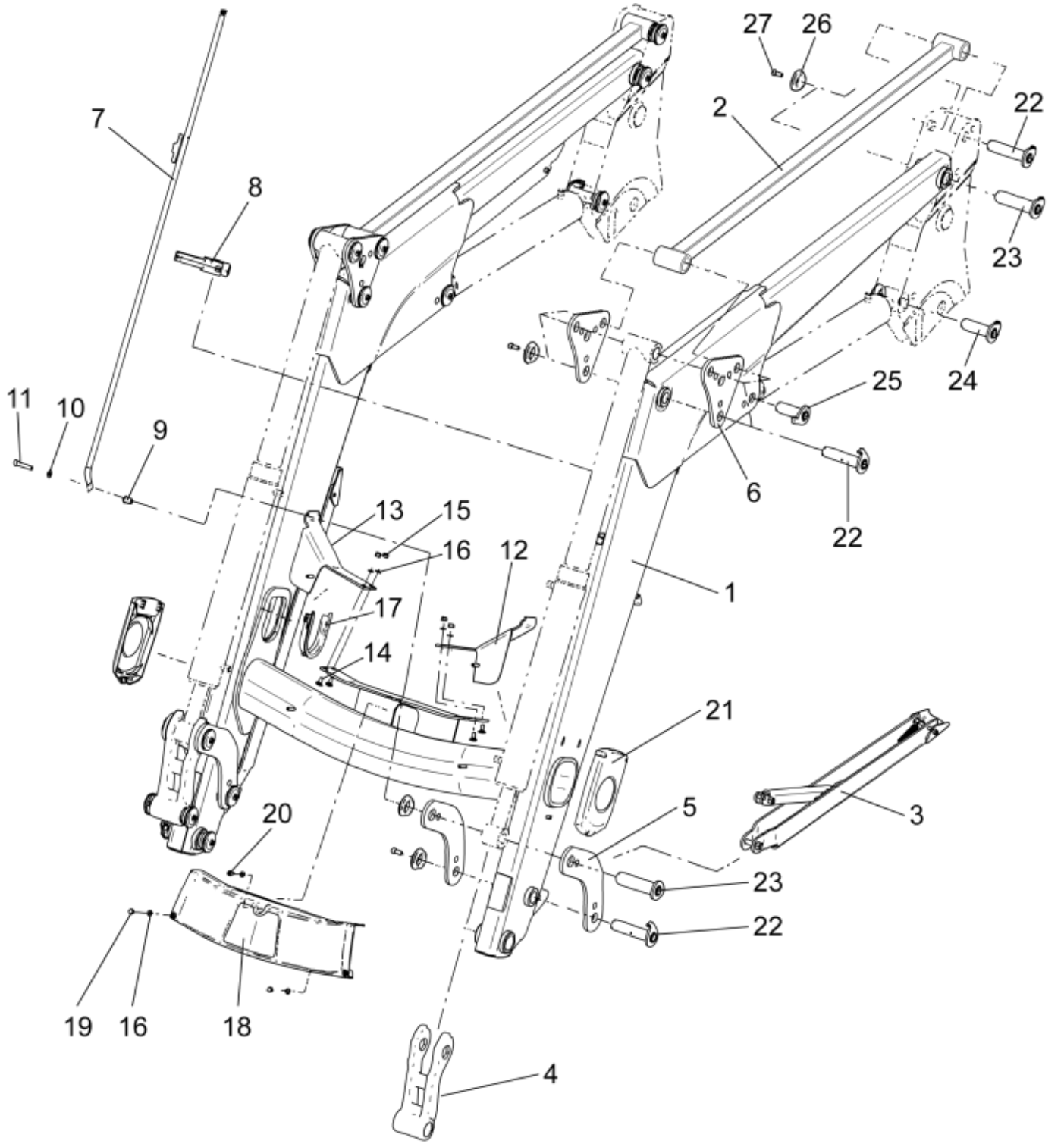


r25xxT_1


© 2025 Jost

**Part assemblies** Loader beam

| PartNo | Pos | Qty | Name | Specifications |
|---|---|---|---|---|
| 5211771-1 | 1 | 1 | Loader beam w. bushings | Glossy Black |
| 5213501-1 | 2 | 2 | Parallel rod w. bushings | Glossy Black |
| 5218004-1 | 3 | 2 | Support leg | Glossy Black |
| 5214831-1 | 4 | 2 | Link w. bushings | Glossy Black |
| 5214111-1 | 5 | 4 | Link | Glossy Black |
| 5214126-1 | 6 | 2 | Link pair | Glossy Black |
| 5215216 | 7 | 1 | Indicator rod | |
| 5215208 | 8 | 1 | Holder kit | |
| 5215227 | 9 | 1 | Spacer | |
| 5013110 | 10 | 1 | Washer | BRB 10.5x22x2 |
| 5050605 | 11 | 1 | Screw | MC6S 10x50 Loc |
| 5211255 | 12 | 1 | Bracket | |
| 5211256 | 13 | 1 | Bracket | |
| 5006001 | 14 | 4 | Screw | MVBF 8x20 |
| 5011553 | 15 | 4 | Nut | M6M M8 Loc-king |
| 5013101 | 16 | 5 | Washer | BRB 8,4 x 16 |
| 5215101 | 17 | 2 | Cover | |
| 5215021 | 18 | 1 | Cover | |
| 5011910 | 19 | 4 | Nut | |
| 5002058 | 20 | 1 | Screw | M6S 8x16 |
| 5215191 | 21 | 2 | Cover | |
| 60018046 | 22 | 10 | Pivot Pin | D=30, L=127mm |
| 60018053 | 23 | 4 | Pivot Pin | D=35, L=127mm |
| 60018047 | 24 | 2 | Pivot Pin | D=30, L=96mm |
| 60018050 | 25 | 2 | Pivot Pin | D=30, L=84mm |
| 5215131 | 26 | 22 | Locking cover | |
| 5050608 | 27 | 22 | Screw | MC6S M10x20 Loc |


© 2025 Jost