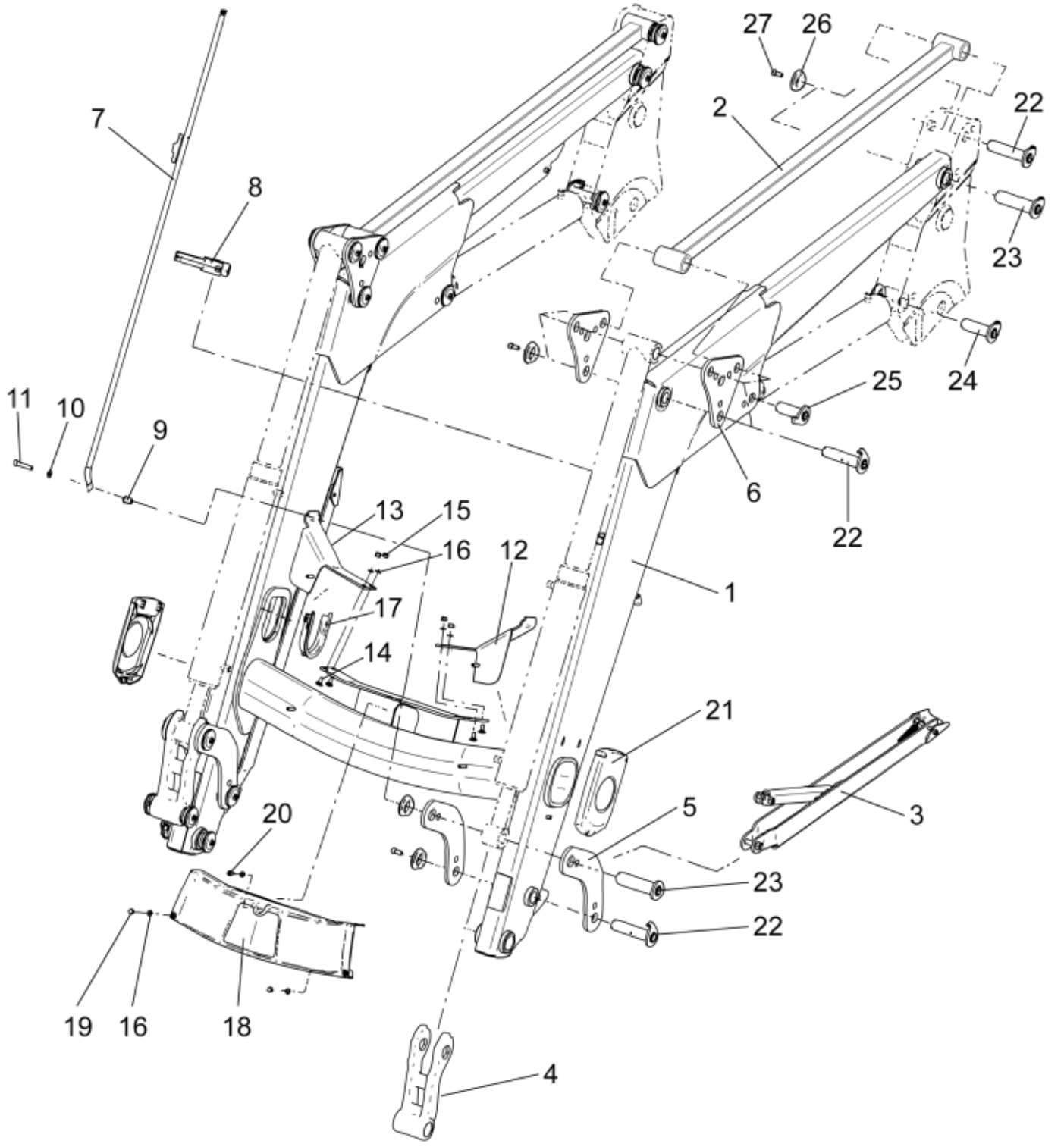

r25xxT_1

© 2025 Jost

Part assemblies Loader beam

PartNo	Pos	Qty	Name	Specifications
5211763-1	1	1	Loader beam w. bushings	Glossy Black
5220703-1	2	2	Parallel rod w. bushings	Glossy Black. Replaces 5213503
5218005-1	3	2	Support leg	Glossy Black
60052805	4	2	Link w. bushings	Glossy Black
5214111-1	5	4	Link	Glossy Black
5214126-1	6	2	Link pair	Glossy Black
5215217	7	1	Indicator rod	
5215208	8	1	Holder kit	
5215227	9	1	Spacer	
5013110	10	1	Washer	BRB 10.5x22x2
5050605	11	1	Screw	MC6S 10x50 Loc
5211255	12	1	Bracket	
5211256	13	1	Bracket	
5006001	14	4	Screw	MVBF 8x20
5011553	15	4	Nut	M6M M8 Loc-king
5013101	16	5	Washer	BRB 8,4 x 16
5215101	17	2	Cover	
5215021	18	1	Cover	
5011910	19	4	Nut	
5002058	20	1	Screw	M6S 8x16
5215192	21	2	Cover	
60018046	22	10	Pivot Pin	D=30, L=127mm
60018053	23	4	Pivot Pin	D=35, L=127mm
60018047	24	2	Pivot Pin	D=30, L=96mm
60018050	25	2	Pivot Pin	D=30, L=84mm
5215131	26	22	Locking cover	
5050608	27	22	Screw	MC6S M10x20 Loc

© 2025 Jost