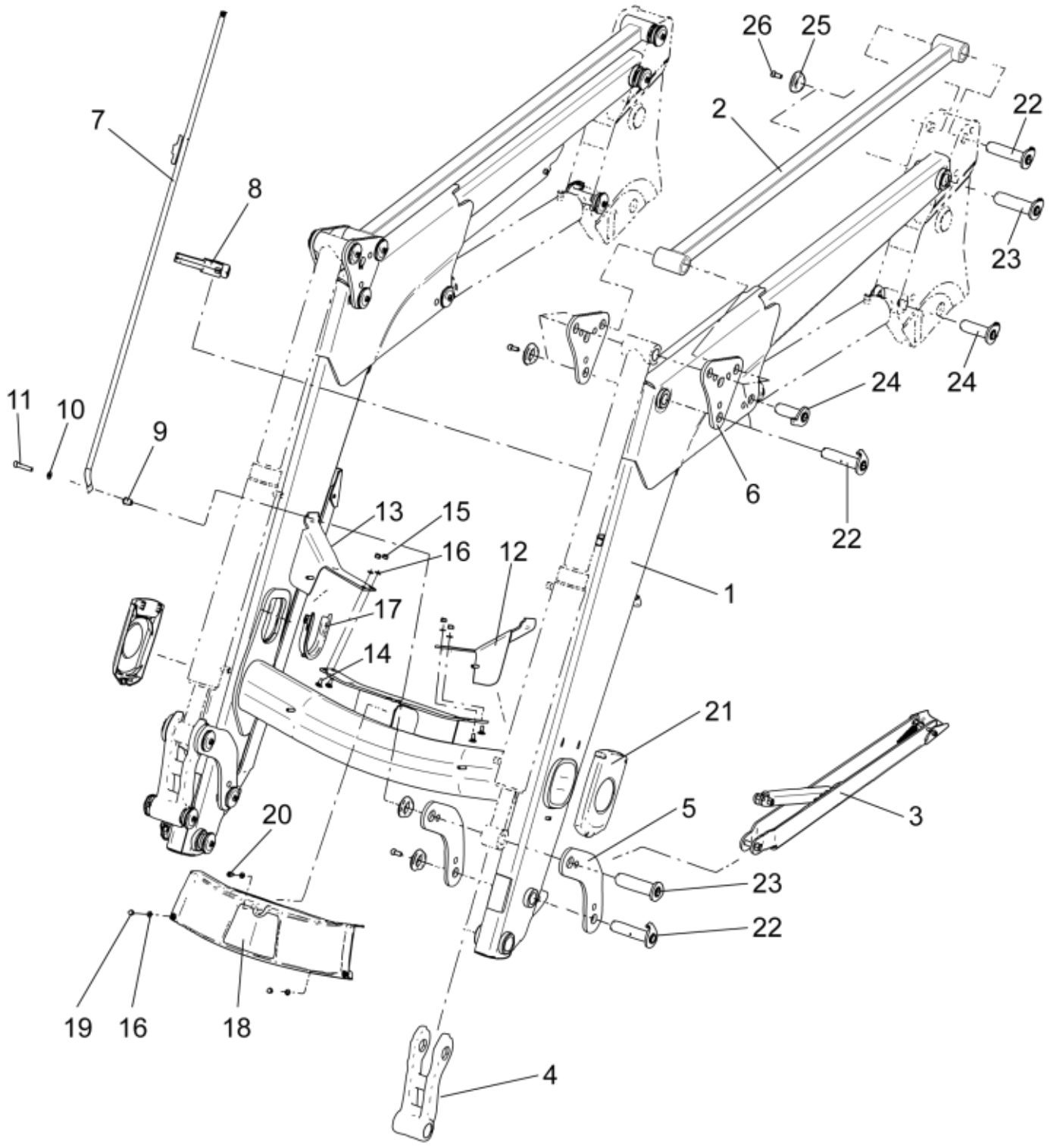

r75xxT_1

© 2025 Jost

Part assemblies Loader beam

PartNo	Pos	Qty	Name	Specifications
5211765-1	1	1	Loader beam w. bushings	Glossy Black
5213505-1	2	2	Parallel rod w. bushings	Glossy Black
5218006-1	3	2 PCS	Support leg	Glossy Black
5214832-1	4	2	Link w. bushings	Glossy Black
5214112-1	5	4	Link	Glossy Black
5214127-1	6	2	Link pair	Glossy Black
5215218	7	1	Indicator rod	
5215208	8	1	Holder kit	
5215227	9	1	Spacer	
5013110	10	1	Washer	BRB 10.5x22x2
5050605	11	1	Screw	MC6S 10x50 Loc
5211255	12	1	Bracket	
5211256	13	1	Bracket	
5006001	14	4	Screw	MVBF 8x20
5011553	15	4	Nut	M6M M8 Loc-king
5013101	16	7	Washer	BRB 8,4 x 16
5215101	17	2	Cover	
5215021	18	1	Cover	
5011910	19	2	Nut	
5002058	20	1	Screw	M6S 8x16
5215193	21	2	Cover	
60018053	22	10	Pivot Pin	D=35, L=127mm
60018062	23	4	Pivot Pin	D=40, L=127mm
60018058	24	4	Pivot Pin	D=35, L=96mm
5215131	25	18	Locking cover	
5050608	26	18	Screw	MC6S M10x20 Loc

© 2025 Jost