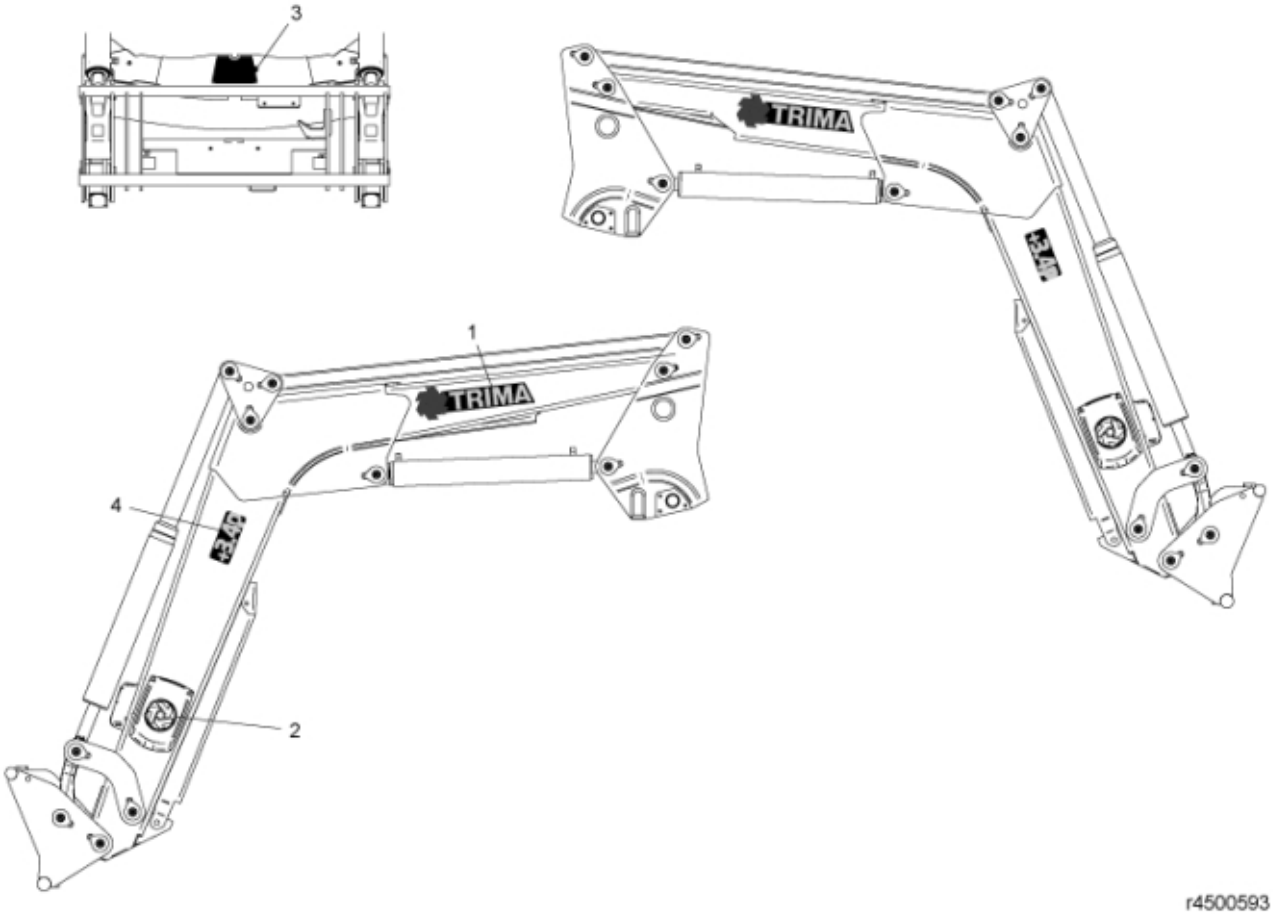

© 2025 Jost

Part assemblies	Decal kit +3.4P

PartNo	Pos	Qty	Name	Specifications
11135054	1	2 PCS	Decal, Brand	
11135055	2	2 PCS	Decal, Circular	Trima
11135056	3	1 PCS	Trapezoid decal	
11135421	4	2 PCS	+3.4P	

© 2025 Jost