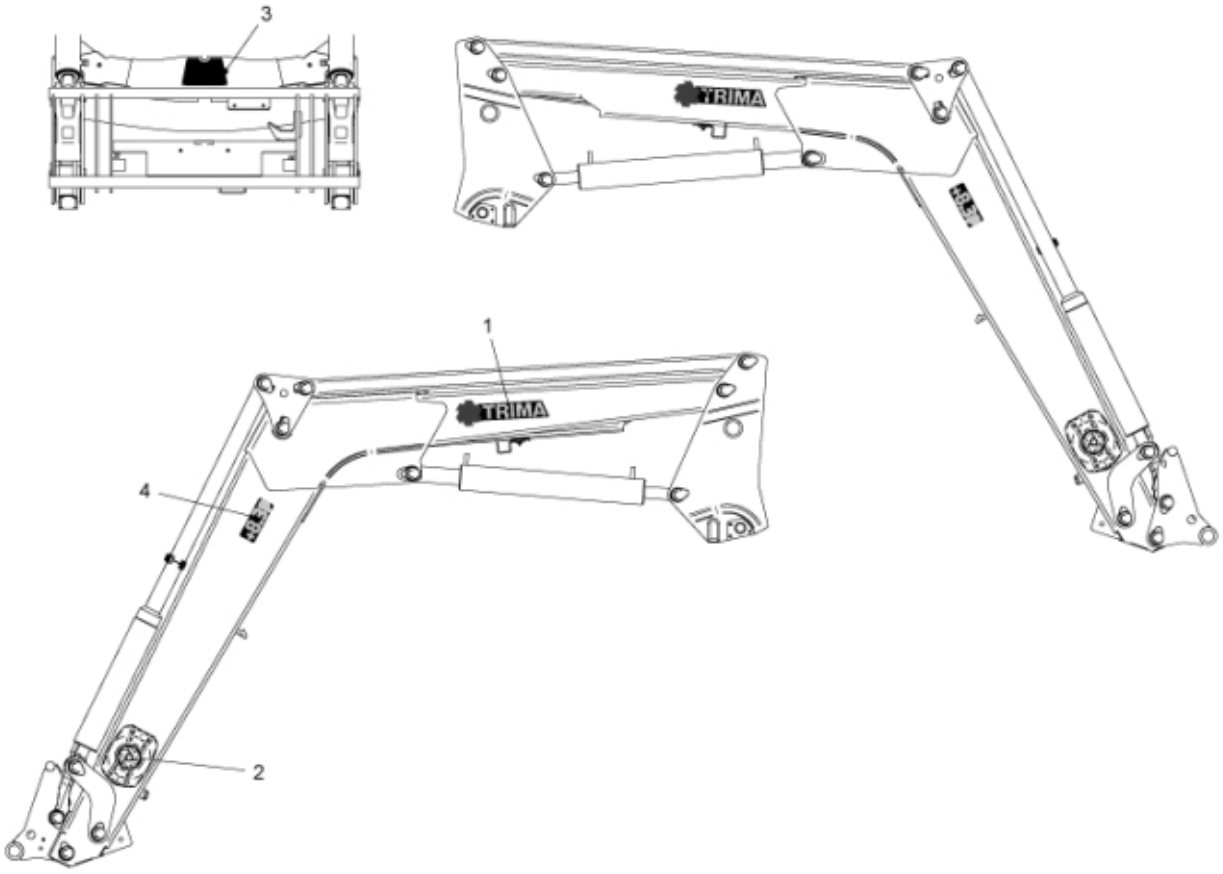

r4500601

© 2025 Jost

Part assemblies	Decal kit +8.3P

PartNo	Pos	Qty	Name	Specifications
11135054	1	2 PCS	Decal, Brand	
11135055	2	2 PCS	Decal, Circular	Trima
11135056	3	1 PCS	Trapezoid decal	
11135429	4	2 PCS	+8.3P	

© 2025 Jost