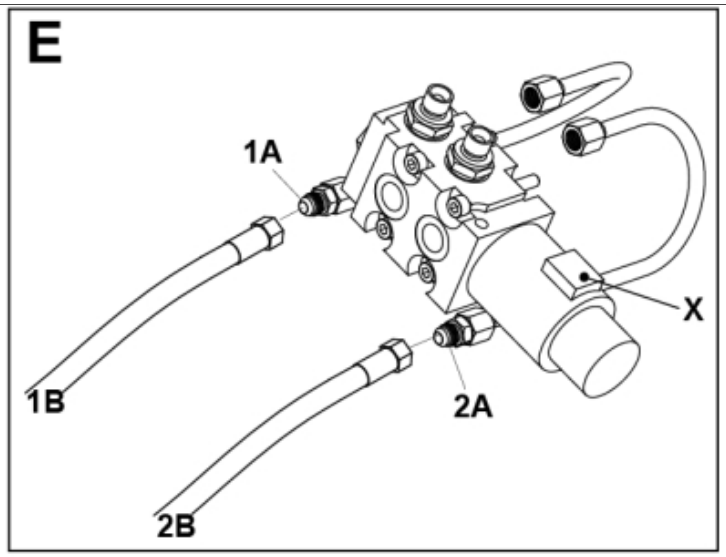

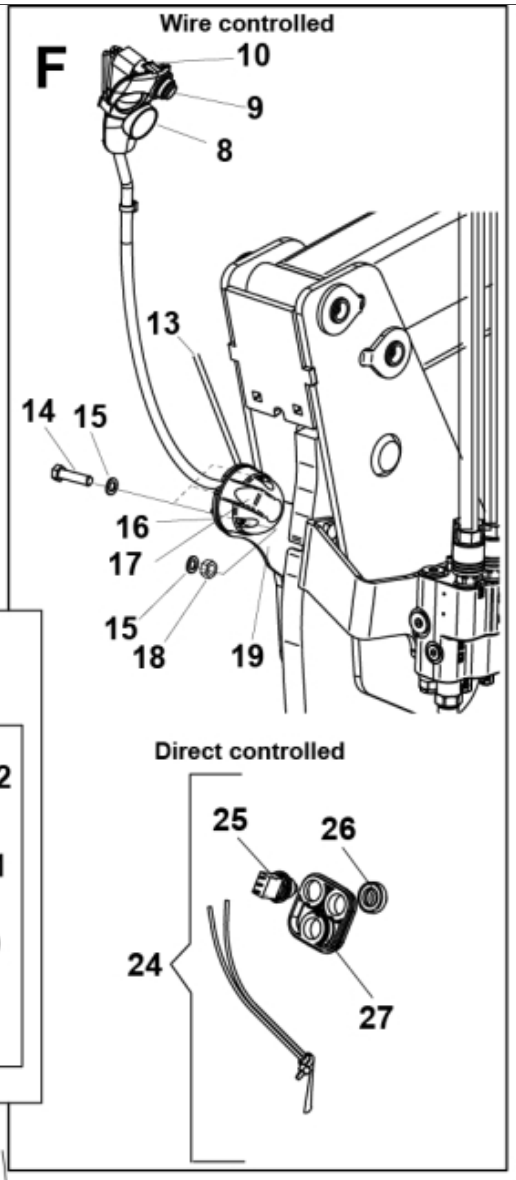

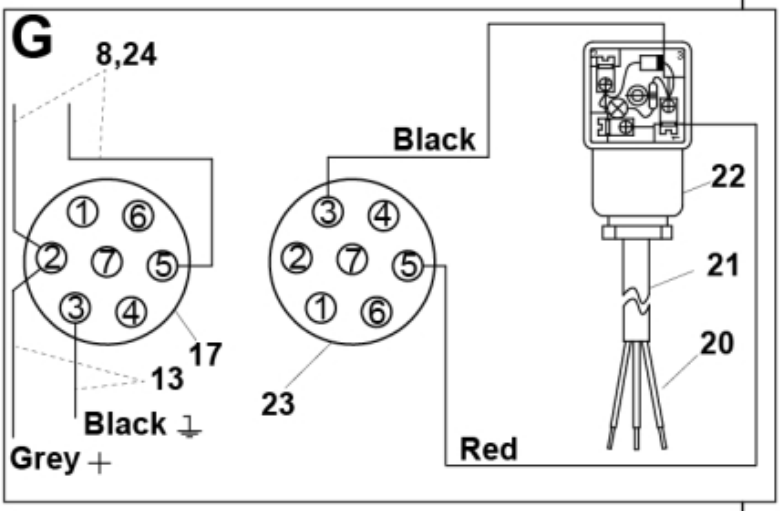

M10550440_441-2

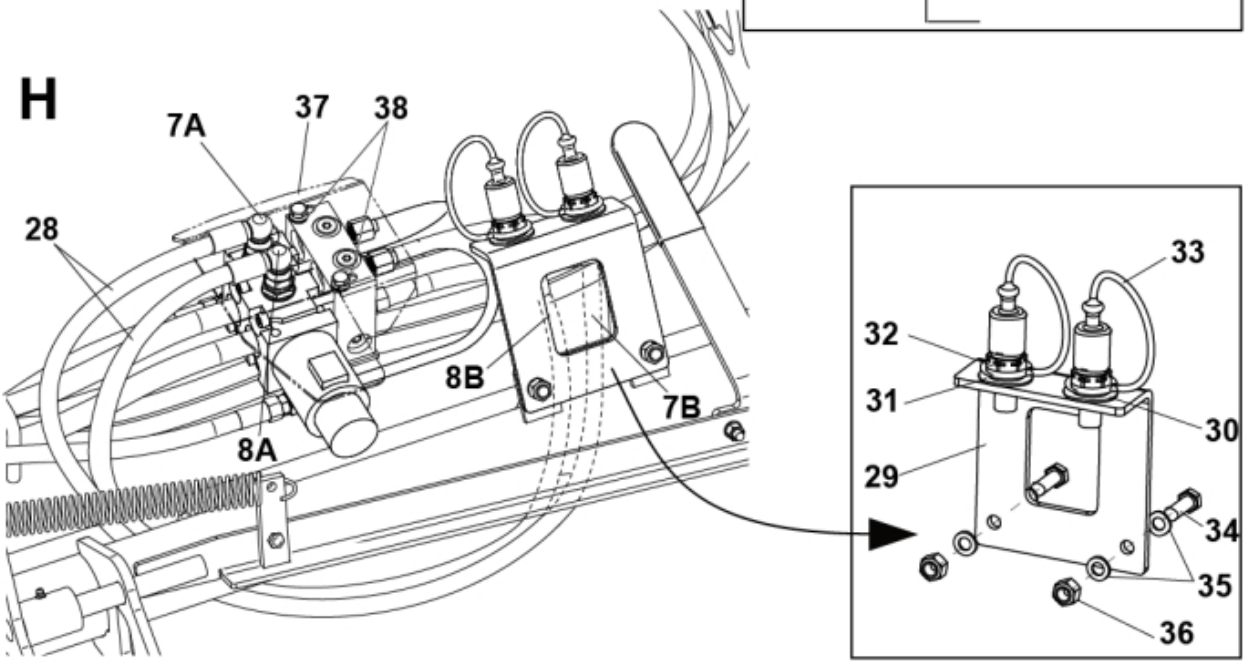

© 2025 Jost

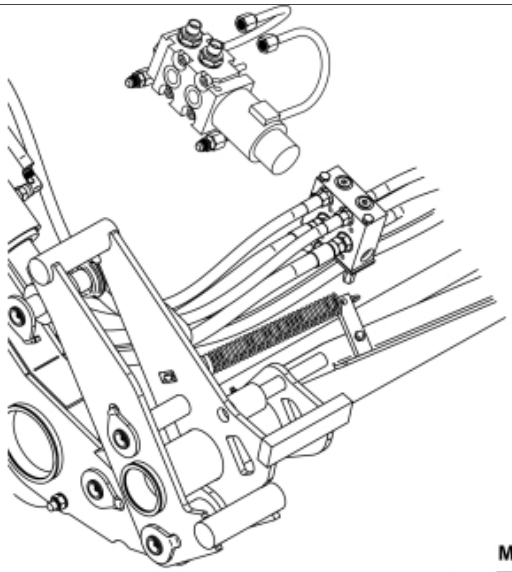

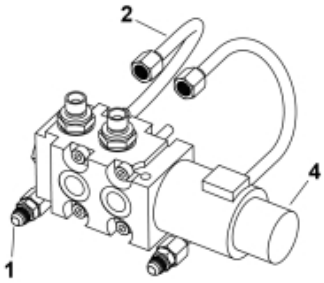

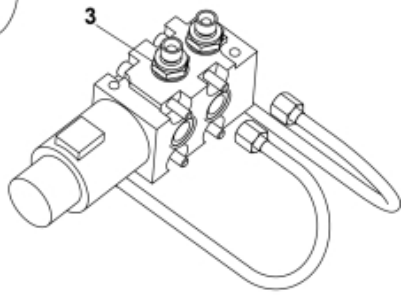

M10550440_441-1

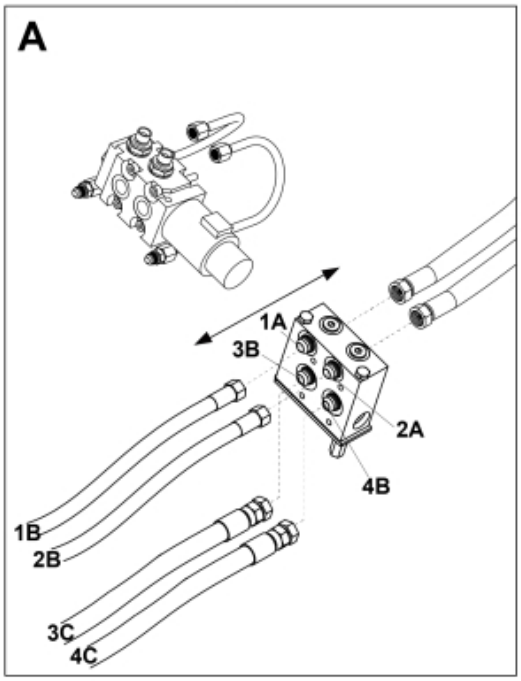

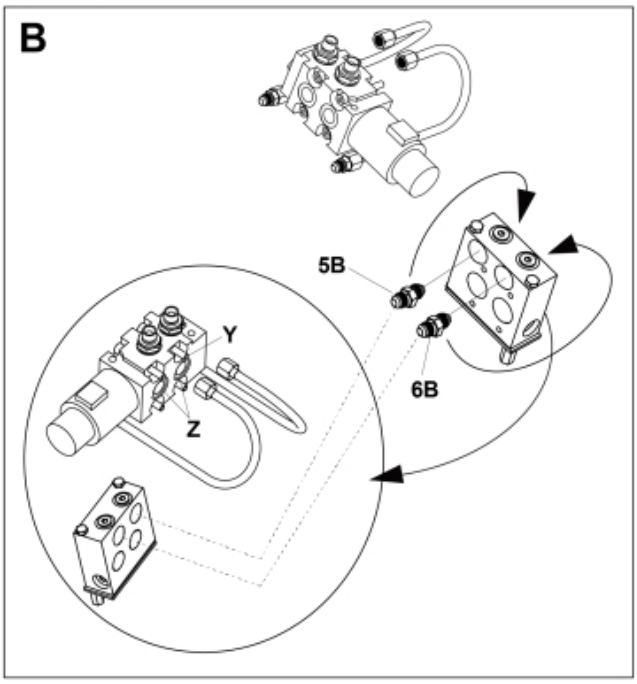

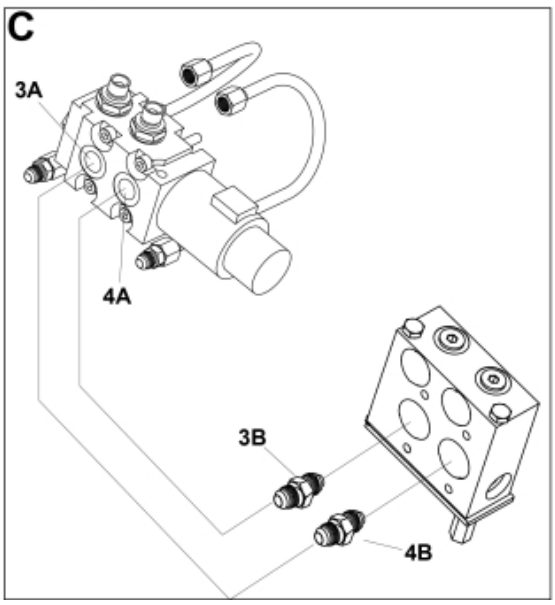

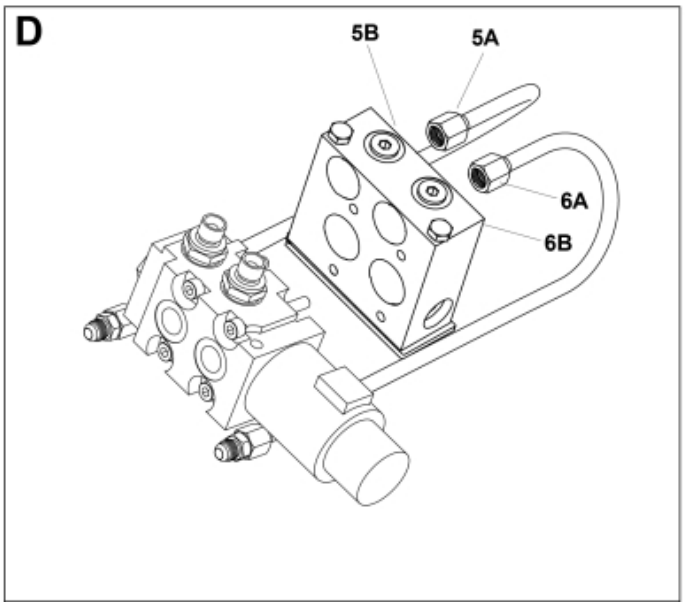

© 2025 Jost

Part assemblies 3rd service - Direct MSL

PartNo	Pos	Qty	Name	Specifications
10550441			3rd service - Direct MSL	
10550444		1	Control valve	
5221303		1	• Oil pipe kit	
5028109	1	2	•• Adaptor	JIC 9/16"
5222581	2	2	•• Oil pipe	
5028262	3	2	• Adaptor	
5221387	4	1	• Control valve	
5004054	Y	4	•• Screw	MC6S M8x80
5004056	Y2	4	•• Screw	M8x65
5039034	Z	2	•• O-ring	
313497		1	Electric mounting kit	
313476	13	1	• Electr. Cable	
5004903	14	3	• Screw	MC6S 5x50 (8.8 fz)
5013112	15	6	• Washer	5,3x10x1,5
5102039	16	1	• Rubber boot	For caravan connector
5024378	17	1	• Connector, female	7-Pole
5011051	18	3	• Nut	M6M 5
5201142	19	1	• Connector Support	
5103017		1	• Cable terminal	
5033621		5	• Cable tie	4.6x150
5102152	20	1	Cable	L=4400mm
5024205	21	1	Cable	
5024376	22	1	Connector	
5024379	23	1	Connector	
5021084	24	1 PCS	Boot	1 switch
5021095	25	1 PCS	• Switch	
5021096	26	1 PCS	• Gaitor	
5021094	27	1 PCS	• Boot	0 switches
1103117	28	2	Hose	3/8"
5221949		1 PCS	Bracket	
5221946	29	1 PCS	• Bracket	
5022157	30	1	• Washer, red	
5022159	31	1	• Washer, blue	
5044940	32	2	• Coupling	ISO-A 1/2" Male - G3/8
5044129	33	2	• Dust Cover	1/2" Male
5002077	34	2	Screw	M6S 10x30
5013102	35	4	Washer	BRB 10 x 18 x 2
5011554	36	2	Nut	Loc-King M10
5221954	37	1 PCS	Protection plate	
5013101	38	4	Washer	BRB 8,4 x 16
5221975		1	Hose cover	

© 2025 Jost