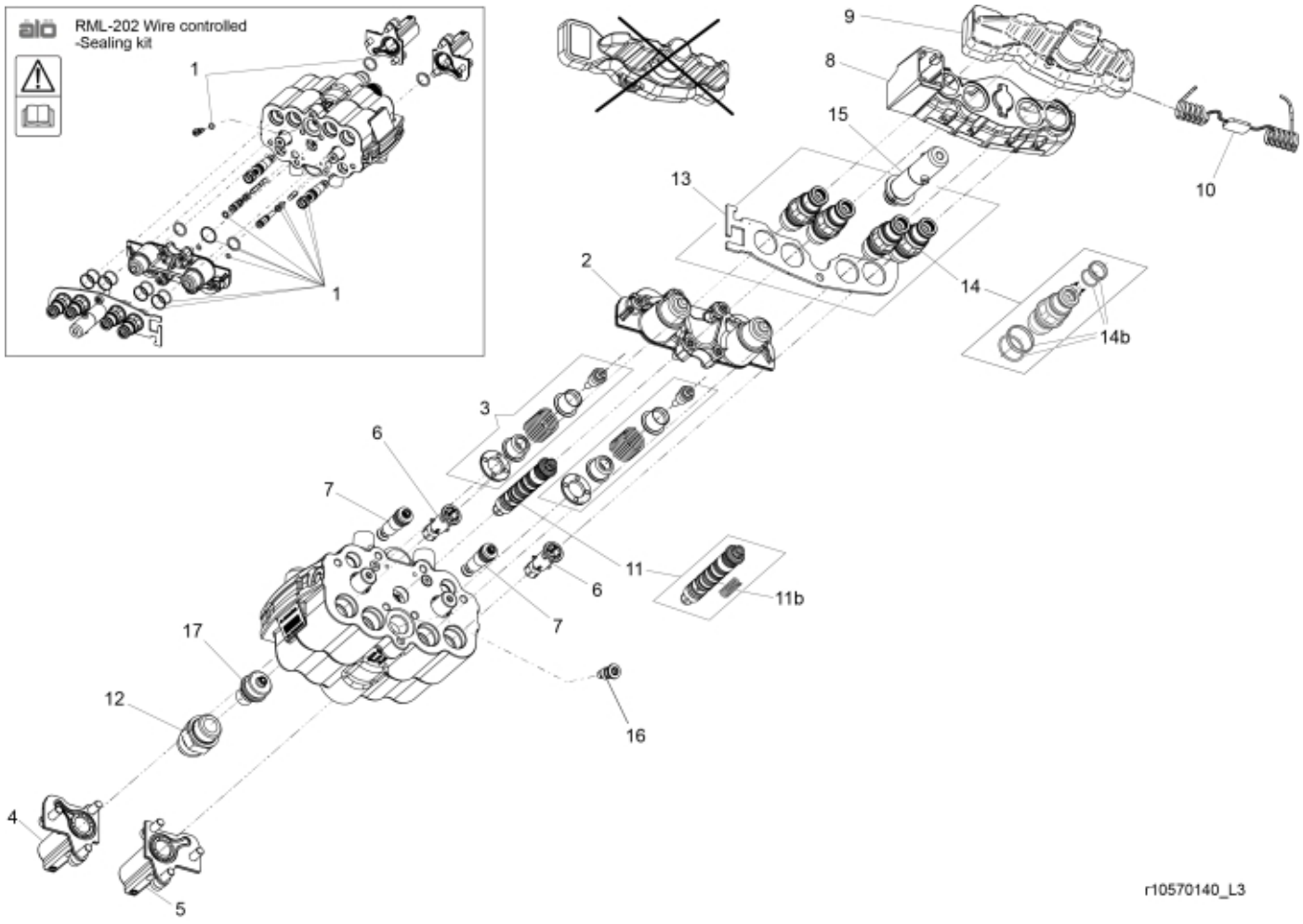
RML-202 Wire controlled
-Sealing kit
1
1
9
8
15
10
13
14
14b
2
3
6
7
11
11b
6
7
17
12
16
4
5
r10570140_L3

© 2025 Jost

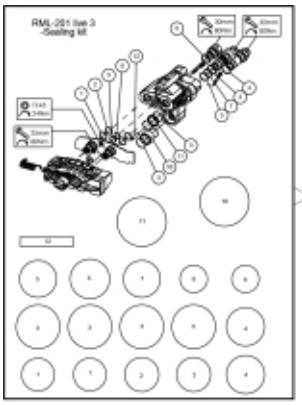

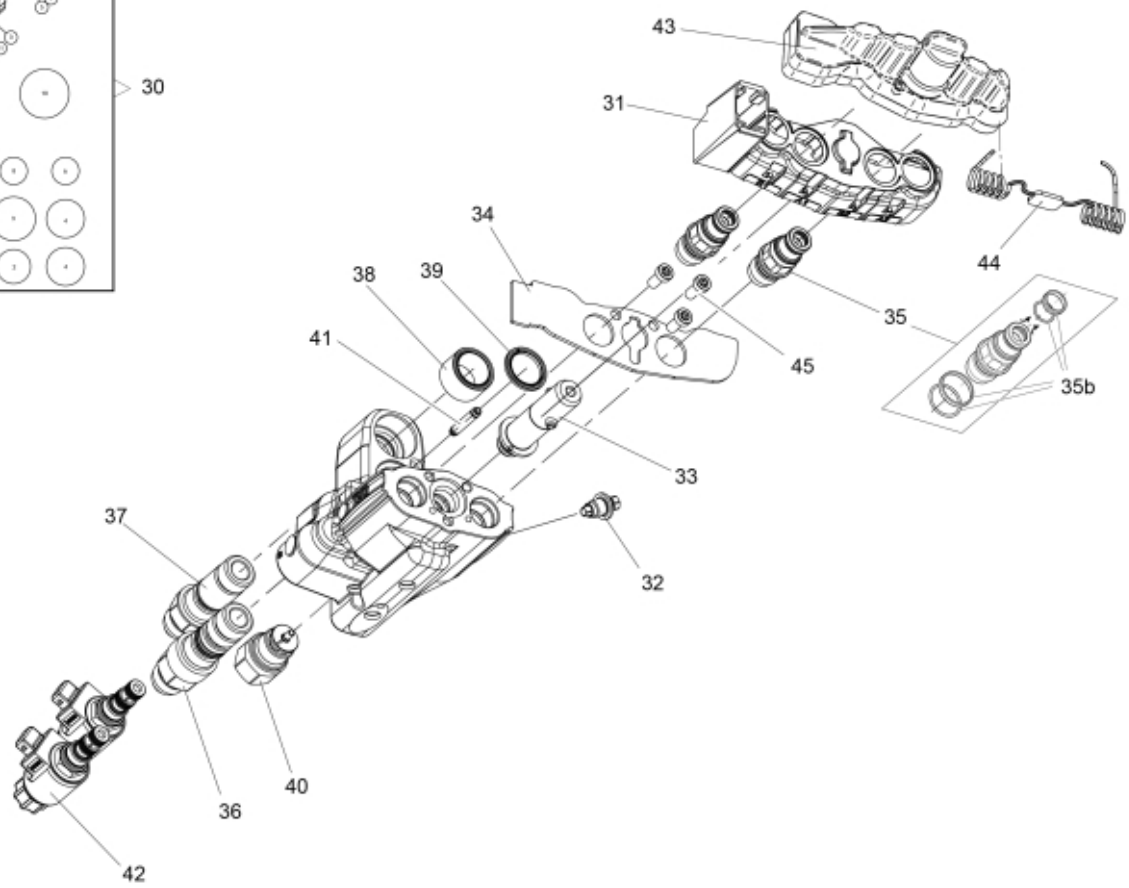

© 2025 Jost

Part assemblies Specification		Valve STM Ergo Live3 OC Specification: Replaces 10570120, 10570015		
PartNo	**Pos**	**Qty**	**Name**	**Specifications**
10570142		1 PCS	Valve STM Ergo Live3 OC	Replaces 10570120, 10570015
4501263	1	1	Seal kit	ErgoDrive LCS
60008696	2	1 PCS	Top cap	(10570080)
10570079	3	2 PCS	Spool control	
10570082	4	1 PCS	Cap LH	
10570081	5	1 PCS	Cap RH	
10570071	6	2	Check valve cpl.	Part is included in kit 10570154 Valve STM Professional Live3 OC
10570069	7	2	Check valve cpl.	Part is included in kit 10570154 Valve STM Professional Live3 OC
10570096	8	1	Cap w. marking	Part is included in kit 10570154 Valve STM Professional Live3 OC, Part is included in kit 10570154 Valve STM Professional Live3 OC
5034232	9	1	Cover	Replaces 5033905
10570094	10	1	• Cable tie	
10570097	11	1 PCS	Shunt OC cpl.	Part is included in kit 10570154 Valve STM Professional Live3 OC
4501272	11b	1	• Spring	
5028086	12	1	Adapter cpl.	Part is included in kit 10570154 Valve STM Professional Live3 OC
10570088	13	1	Cover plate	
4500294	14	4	Coupling (M)	Replaces 5044956/60017561
4501264	14b	1	• Seal kit	1 seal kit/coupling required
10570078	15	1	Adapter Multi coupling	
10570135	16	1 PCS	Check valve	Part is included in kit 10570154 Valve STM Professional Live3 OC
10570188	17	1 PCS	Cartridge	Replaces 10570102, Part is included in kit 10570154 Valve STM Professional Live3 OC
5040064	30	1	Seal kit	
10570096	31	1	Cap w. marking	Part is included in kit 10570154 Valve STM Professional Live3 OC, Part is included in kit 10570154 Valve STM Professional Live3 OC
10570070	32	1 PCS	Check valve cpl.	
10570078	33	1	Adapter Multi coupling	
10570090	34	1 PCS	Cover plate Single 2	
4500294	35	2	Coupling (M)	Replaces 5044956/60017561
4501264	35b	1	• Seal kit	1 seal kit/coupling required
5028090	36	1 PCS	Adapter with sealing	
5028089	37	1 PCS	Adapter with sealing	
5040066	38	1 PCS	Sealing sleeve cpl.	
5040065	39	1 PCS	Sealing sleeve cpl.	
10570074	40	1 PCS	Spool control unit cpl.	
10570075	41	1 PCS	Connecting pipe cpl.	
10570093	42	2	Solenoid	
5034232	43	1	Cover	Replaces 5033905
10570094	44	1	• Cable tie	
5006019	45	3	Screw	8x16 fzb

© 2025 Jost