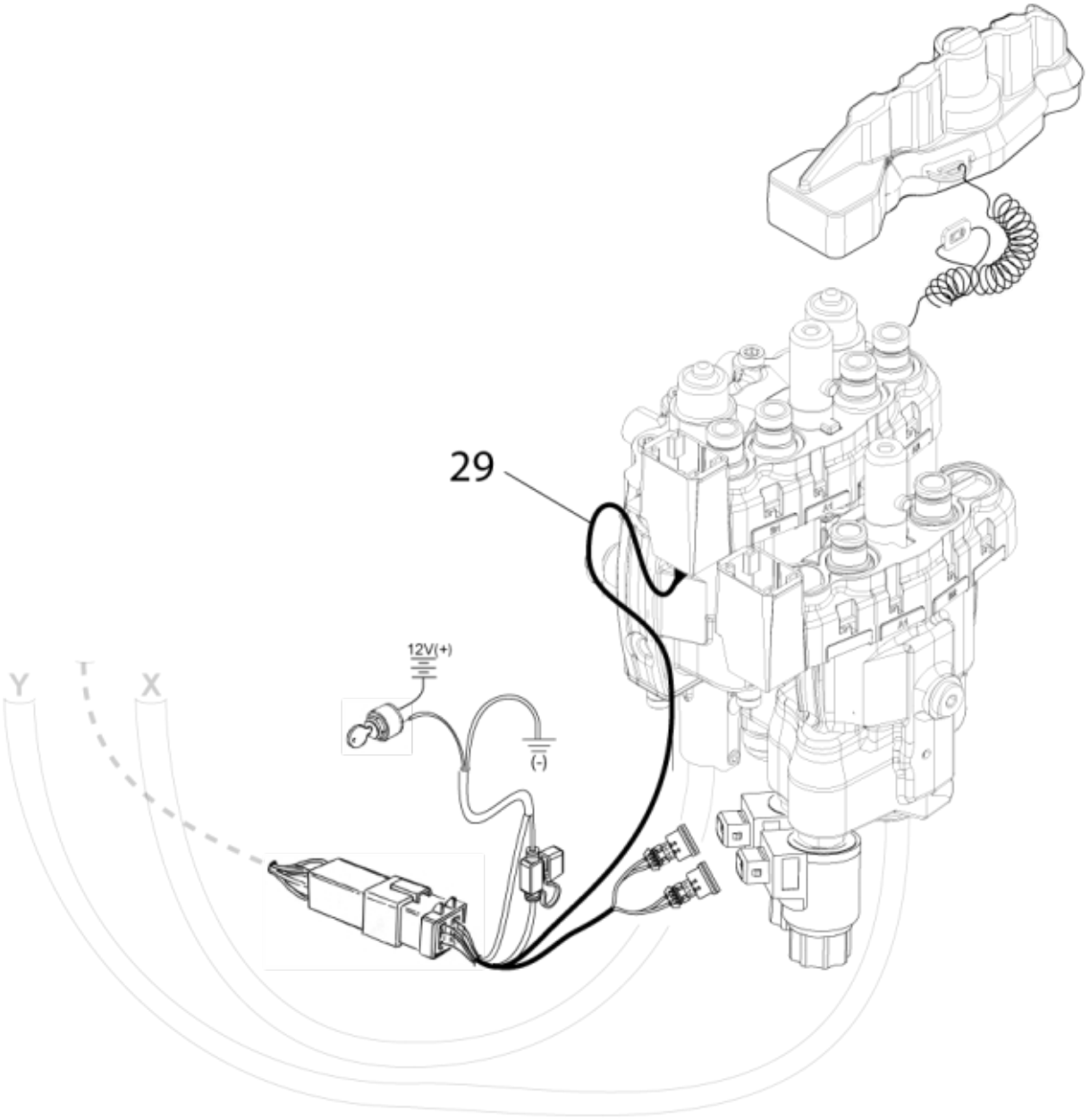

Ergo+Live3

© 2025 Jost

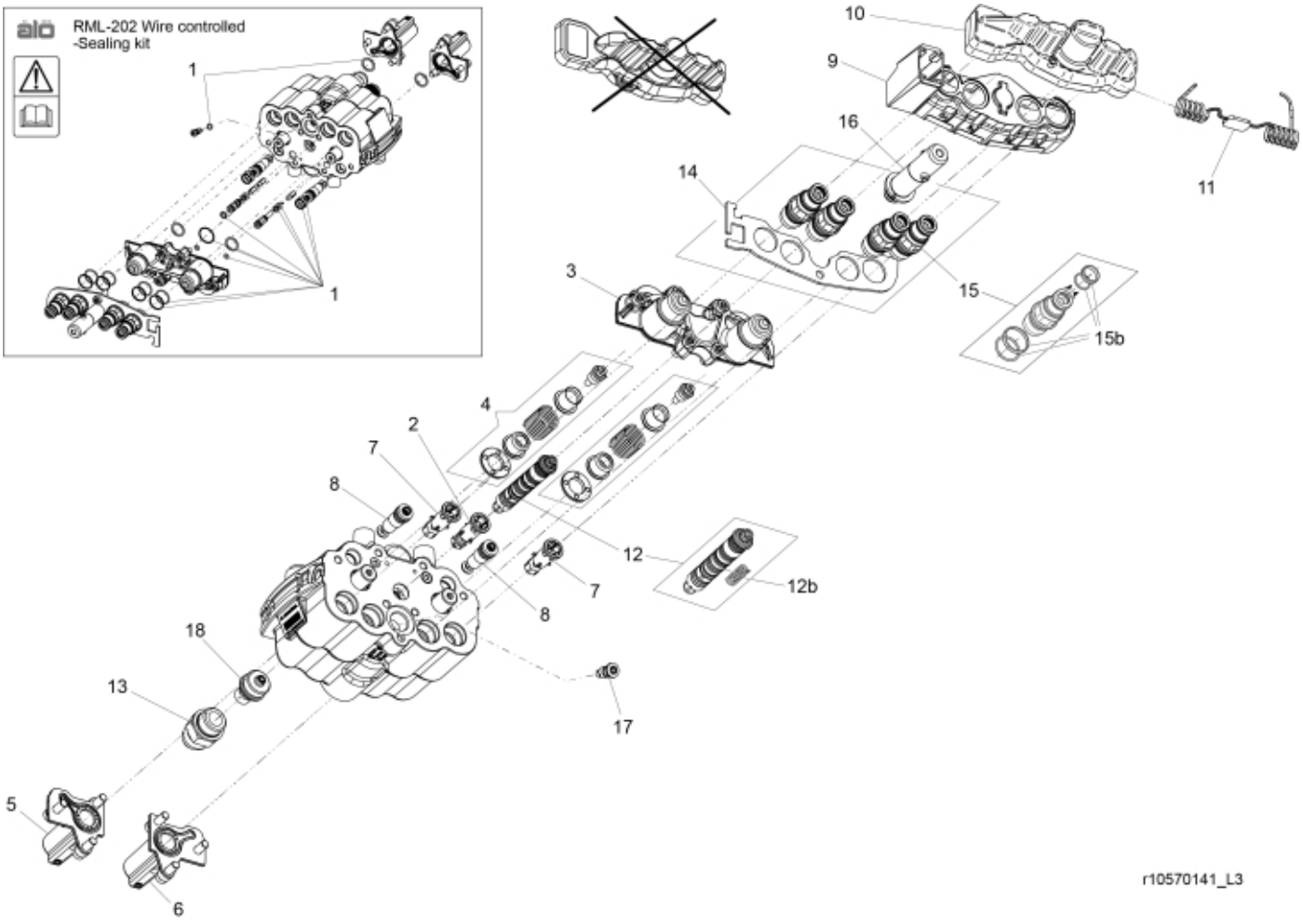
RML-202 Wire controlled
-Sealing kit
1
1
10
9
16
14
11
15
15b
3
4
2
7
8
12
12b
7
8
18
13
17
5
6
r10570141_L3

© 2025 Jost

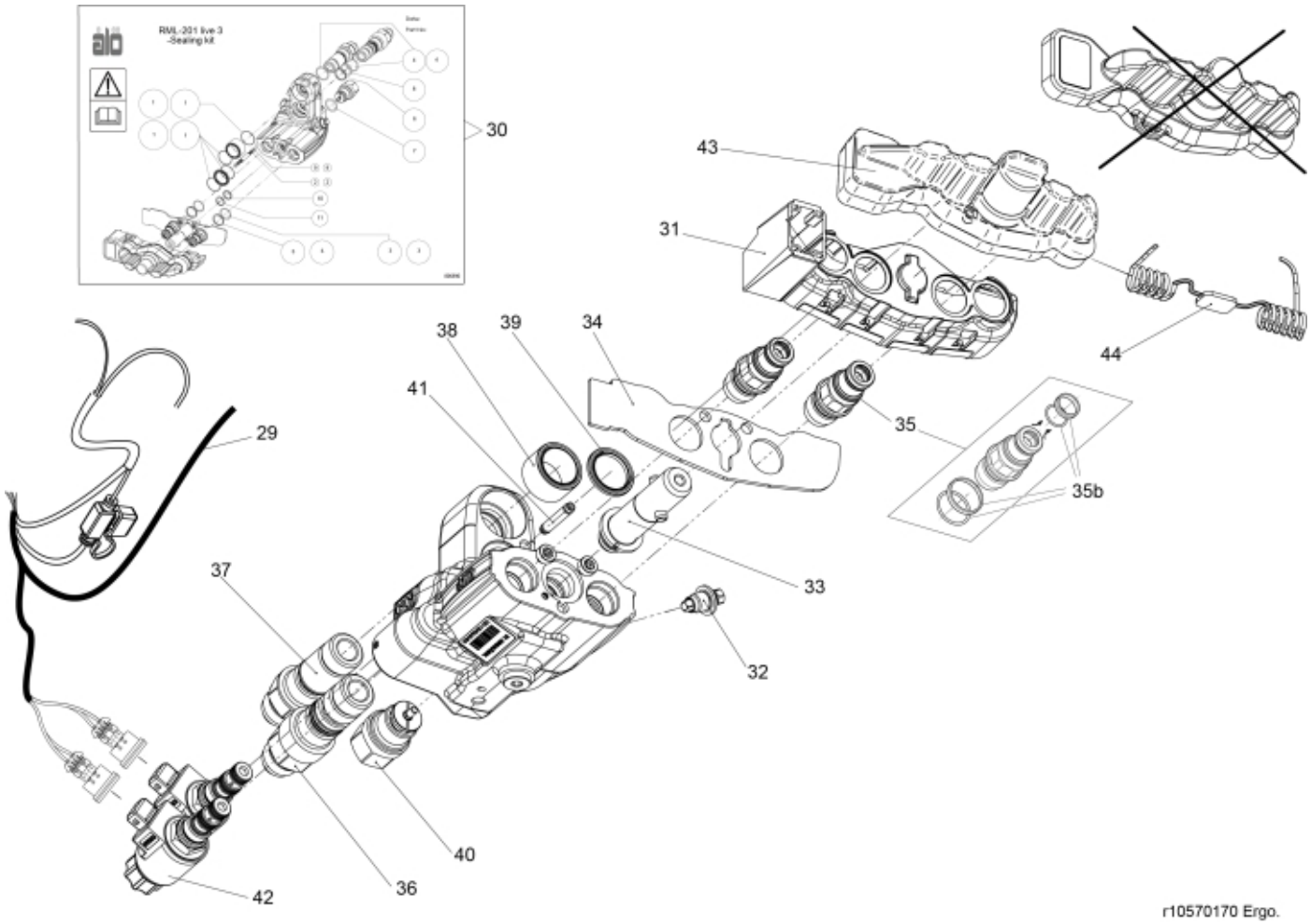
RML-201 live 3
-Sealing kit
30
43
31
44
38
39
34
41
35
35b
29
33
37
32
40
36
42
r10570170 Ergo.

© 2025 Jost

Part assemblies Valve STM Ergo Live3 OC 225Bar

PartNo	Pos	Qty	Name	Specifications
10570145		1	Valve STM Ergo Live3 OC 225Bar	
4501263	1	1	Seal kit	ErgoDrive LCS
10570072	2	1	Pressure relief valve	Part is included in kit 10570154 Valve STM Professional Live3 OC
60008696	3	1 PCS	Top cap	(10570080)
10570079	4	2 PCS	Spool control	
10570082	5	1 PCS	Cap LH	
10570081	6	1 PCS	Cap RH	
10570071	7	2	Check valve cpl.	Part is included in kit 10570154 Valve STM Professional Live3 OC
10570069	8	2	Check valve cpl.	Part is included in kit 10570154 Valve STM Professional Live3 OC
10570096	9	1	Cap w. marking	Part is included in kit 10570154 Valve STM Professional Live3 OC, Part is included in kit 10570154 Valve STM Professional Live3 OC
5034232	10	1	Cover	Replaces 5033905
10570094	11	1	• Cable tie	
10570097	12	1 PCS	Shunt OC cpl.	Part is included in kit 10570154 Valve STM Professional Live3 OC
4501272	12b	1	• Spring	
5028086	13	1	Adapter cpl.	Part is included in kit 10570154 Valve STM Professional Live3 OC
10570088	14	1	Cover plate	
4500294	15	4	Coupling (M)	Replaces 5044956/60017561
4501264	15b	1	• Seal kit	1 seal kit/coupling required
10570078	16	1	Adapter Multi coupling	
10570135	17	1 PCS	Check valve	Part is included in kit 10570154 Valve STM Professional Live3 OC
10570188	18	1 PCS	Cartridge	Replaces 10570102, Part is included in kit 10570154 Valve STM Professional Live3 OC
5102115	29	1	Cable cpl. Live3	
5040064	30	1	Seal kit	
10570096	31	1	Cap w. marking	Part is included in kit 10570154 Valve STM Professional Live3 OC, Part is included in kit 10570154 Valve STM Professional Live3 OC
10570070	32	1 PCS	Check valve cpl.	
10570078	33	1	Adapter Multi coupling	
10570090	34	1 PCS	Cover plate Single 2	
4500294	35	2	Coupling (M)	Replaces 5044956/60017561
4501264	35b	1	• Seal kit	1 seal kit/coupling required
5028090	36	1 PCS	Adapter with sealing	
5028089	37	1 PCS	Adapter with sealing	
5040066	38	1 PCS	Sealing sleeve cpl.	
5040065	39	1 PCS	Sealing sleeve cpl.	
10570074	40	1 PCS	Spool control unit cpl.	
10570075	41	1 PCS	Connecting pipe cpl.	
10570093	42	2	Solenoid	
5034232	43	1	Cover	Replaces 5033905
10570094	44	1	• Cable tie	

© 2025 Jost