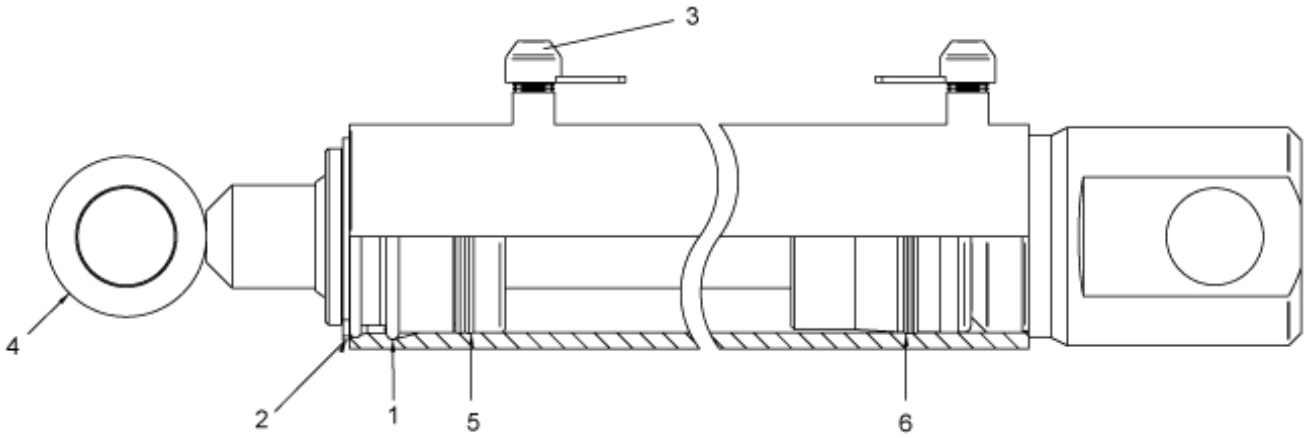

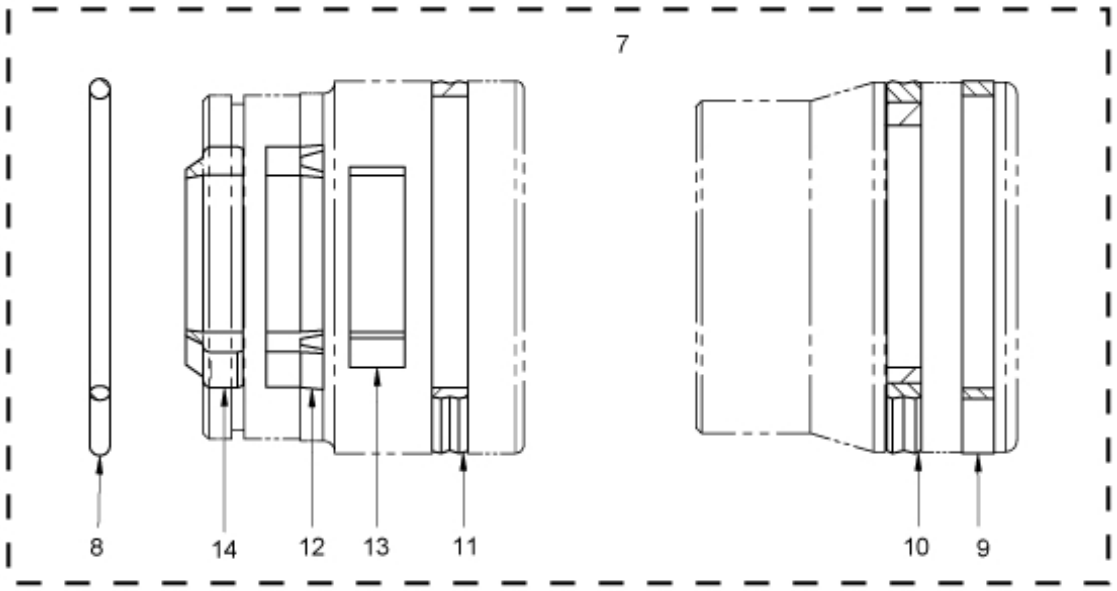

r12716010

© 2025 Jost

Description	70/32
Part assemblies	Cylinder
Specification	Specification: Glossy Black

PartNo	Pos	Qty	Name	Specifications
5016669	1	1	Retaining ring	
5016621	2	1	Retaining ring	
5028083	3	2	Plug	
12716013	4	1	Piston rod	
12707111	5	1 PCS	Bearing	
12707112	6	1	Piston	
5034192	7	1	Seal kit	
5037243	8	1	• O-ring	63,09x3,53
5040013	9	1	• Guide ring	70/65x5,5
5040023	10	1	• Piston seal	70/54,5x6,3
5039003	11	1	• Cover seal	70 x 64,6 x 6,2
5040057	12	1	• Seal kit	43 x 31 x 10
5040058	13	1	• Guide ring	35 x 9.6
5040059	14	1	• Wiper	42 x 31 x 10

© 2025 Jost