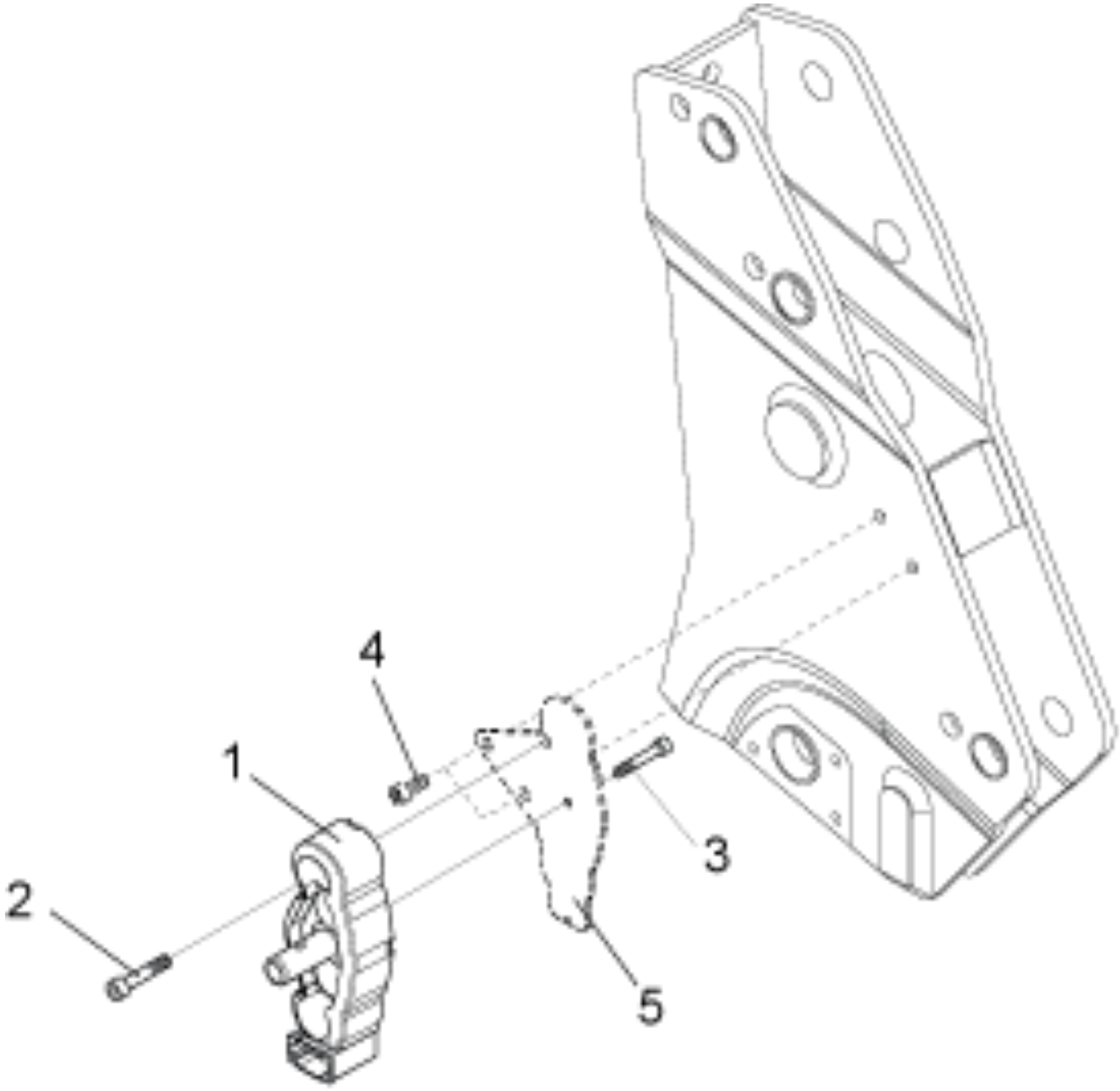

Hose_support_LCS

© 2025 Jost

Part assemblies Hose support LCS

PartNo	Pos	Qty	Name	Specifications
5034234	1	1	Parking support kit	Replaces 5034233, 5033972
5004944	2	1 PCS	• Screw	MC6S M8x45
5004947	3	1	• Screw	MC6S M6x50
5004061	4	2	Screw	MC6S M8x20
5034122	5	1 PCS	Bracket	

© 2025 Jost