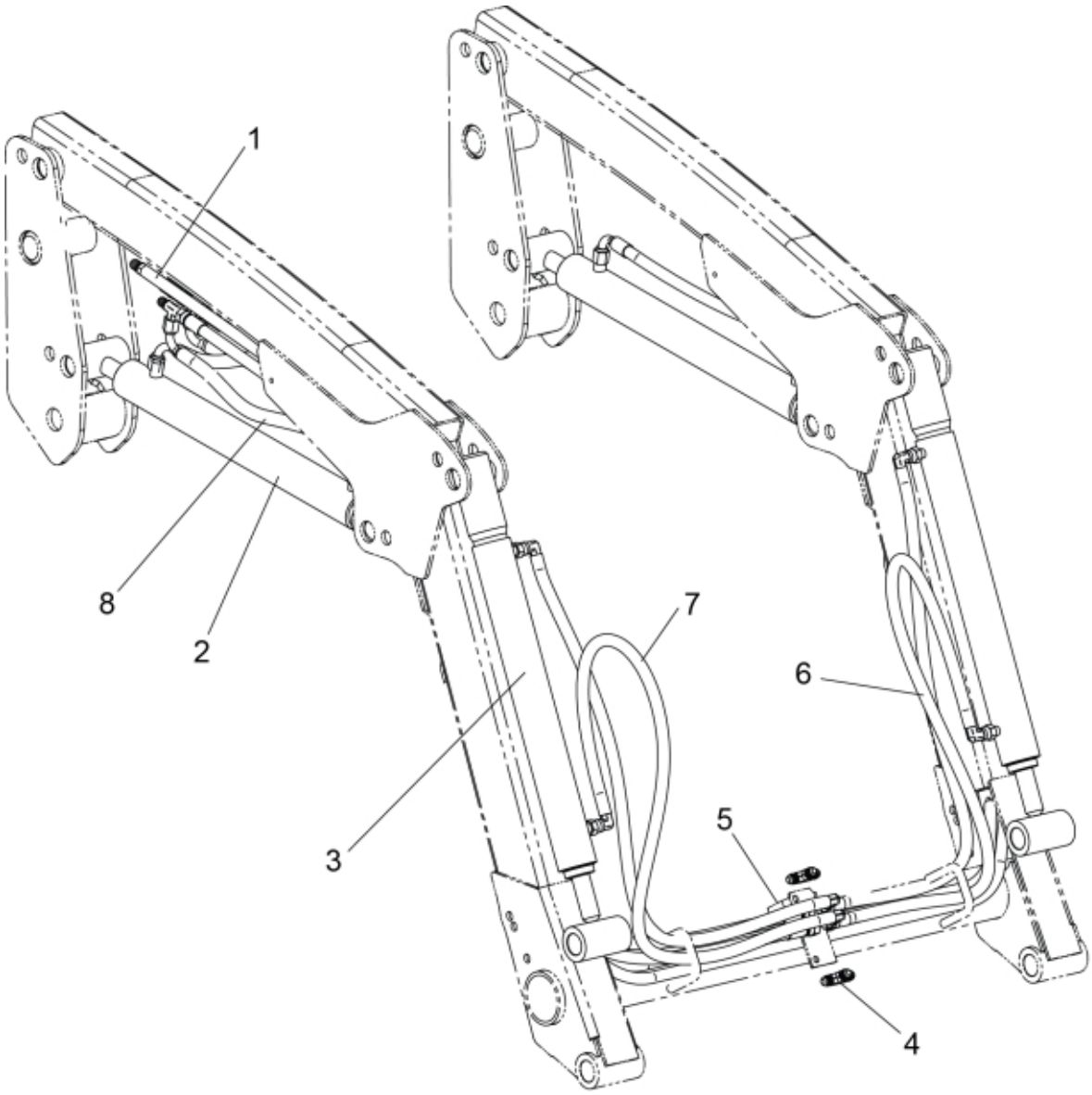

r10ax_2

© 2025 Jost

Part assemblies Hydraulics

PartNo	Pos	Qty	Name	Specifications
60009914	1	1 PCS	Main hose kit	
60026376-1	2	2 PCS	Cylinder	Glossy Black, Replaces 12719110
60007059-1	3	2 PCS	Cylinder	Glossy Black (12719410)
5028077	4	2	Adaptor	
5221961	5	2 PCS	Rubber sheet	
9031901	6	2 PCS	Hose	3/8" L=950mm
9032030	7	2 PCS	Hose	3/8" L=980mm
9032007	8	1 PCS	Hose	3/8" L=405mm

© 2025 Jost