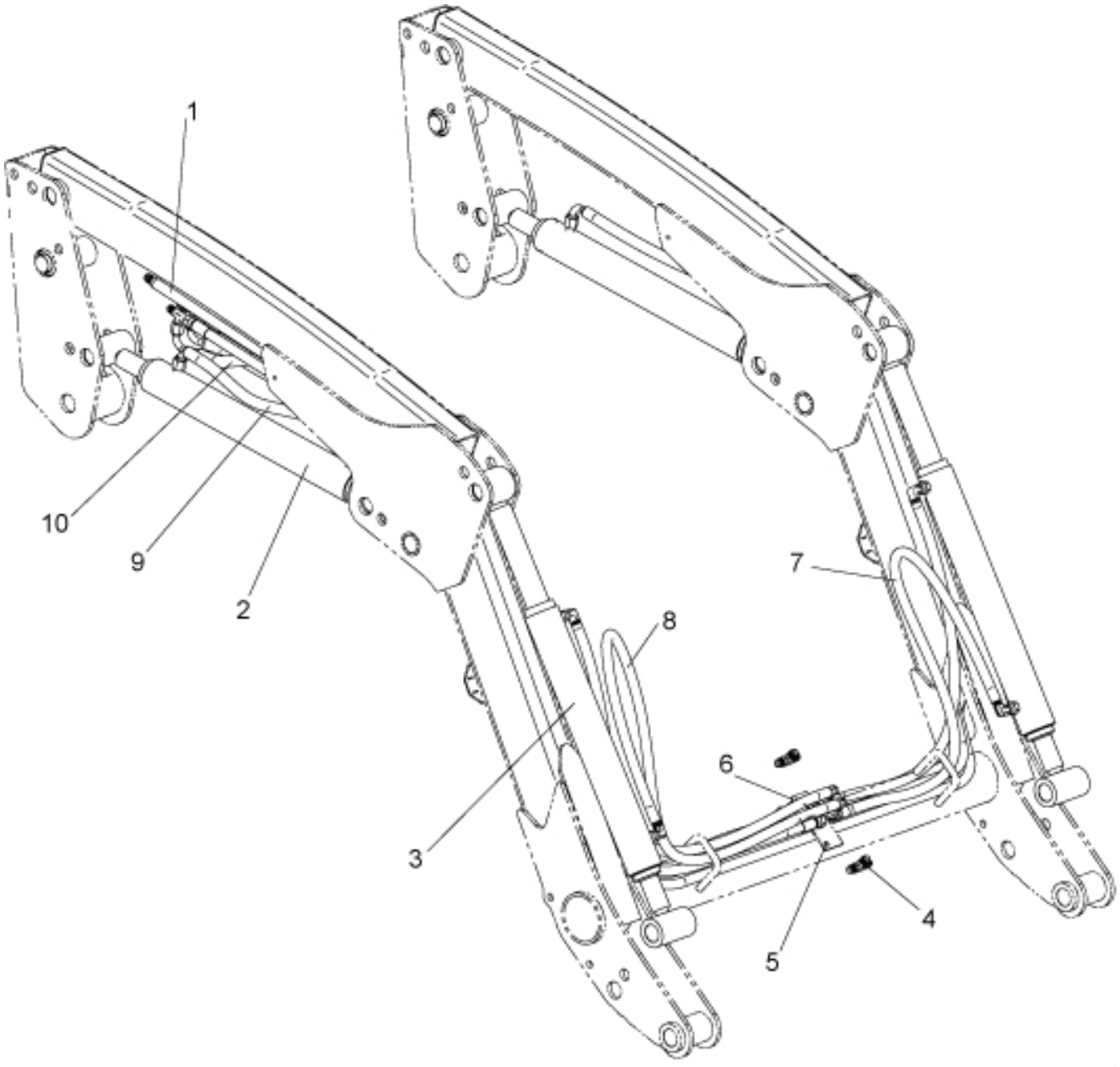

r14ax_2

© 2025 Jost

Part assemblies Hydraulics

PartNo	Pos	Qty	Name	Specifications
9032111	1	1 PCS	Main hose kit	
60007072-1	2	2 PCS	Cylinder	Glossy Black (12720710)
60007075-1	3	2 PCS	Cylinder	Glossy Black (12720810)
5028077	4	2	Adaptor	
5221918	5	1 PCS	Bracket	
5221941	6	1 PCS	Rubber sheet	
9031901	7	2 PCS	Hose	3/8" L=950mm
9031903	8	2 PCS	Hose	3/8" L=980mm
9031867	9	1 PCS	Hose	3/8" L=440mm
9031866	10	1 PCS	Hose	3/8" L=620mm

© 2025 Jost