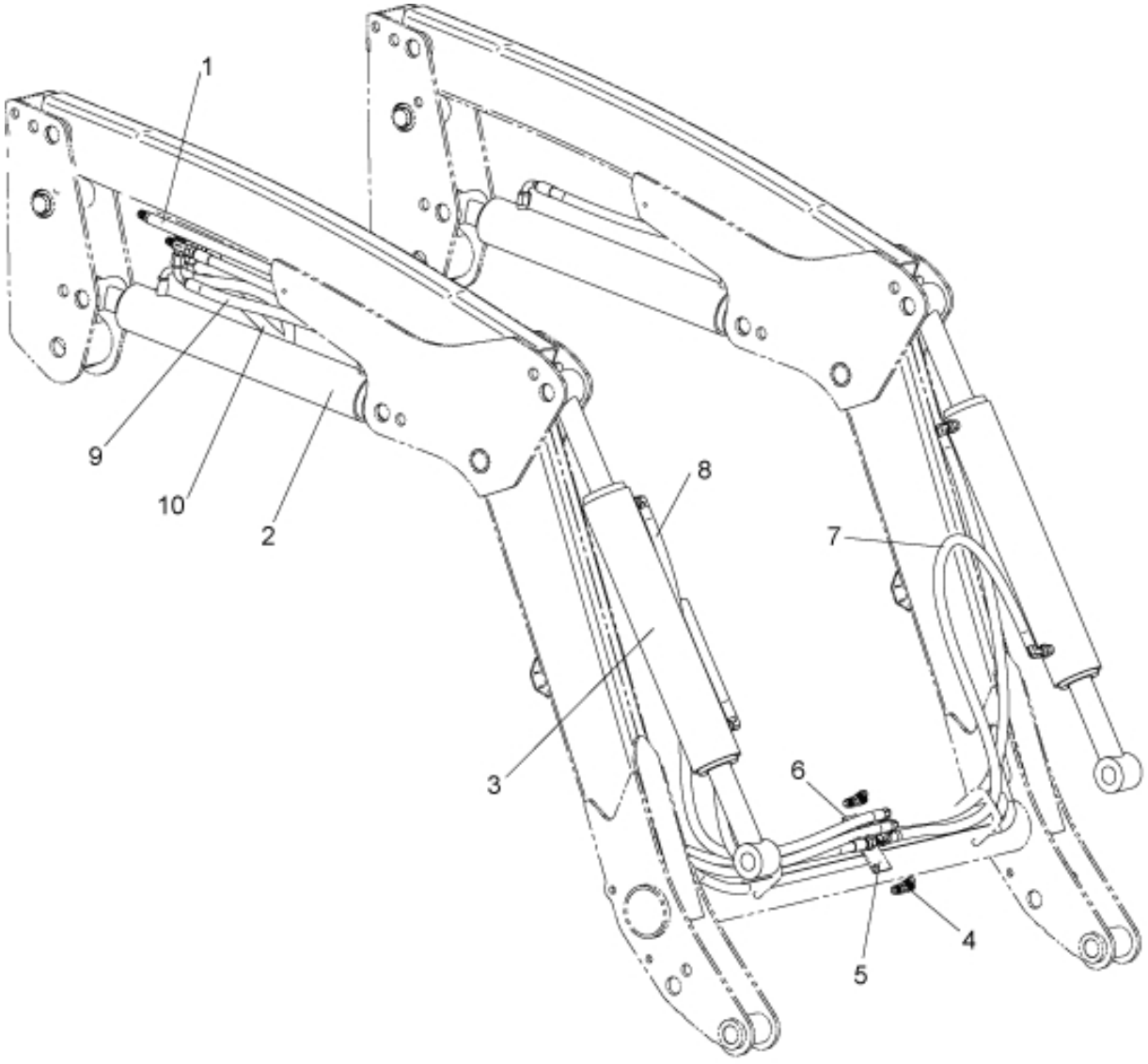

r16_18nx_2

© 2025 Jost

Part assemblies Hydraulics

PartNo	Pos	Qty	Name	Specifications
9032112	1	1 PCS	Main hose kit	
60006575-1	2	2 PCS	Cylinder	Glossy Black (12719310)
60007119-1	3	2 PCS	Cylinder	Glossy Black (12722710)
5028077	4	2	Adaptor	
5221918	5	1 PCS	Bracket	
5221941	6	1 PCS	Rubber sheet	
9031864	7	2 PCS	Hose	3/8" L=1040mm
9031865	8	2 PCS	Hose	3/8" L=1070mm
9031867	9	1 PCS	Hose	3/8" L=440mm
9031866	10	1 PCS	Hose	3/8" L=620mm

© 2025 Jost