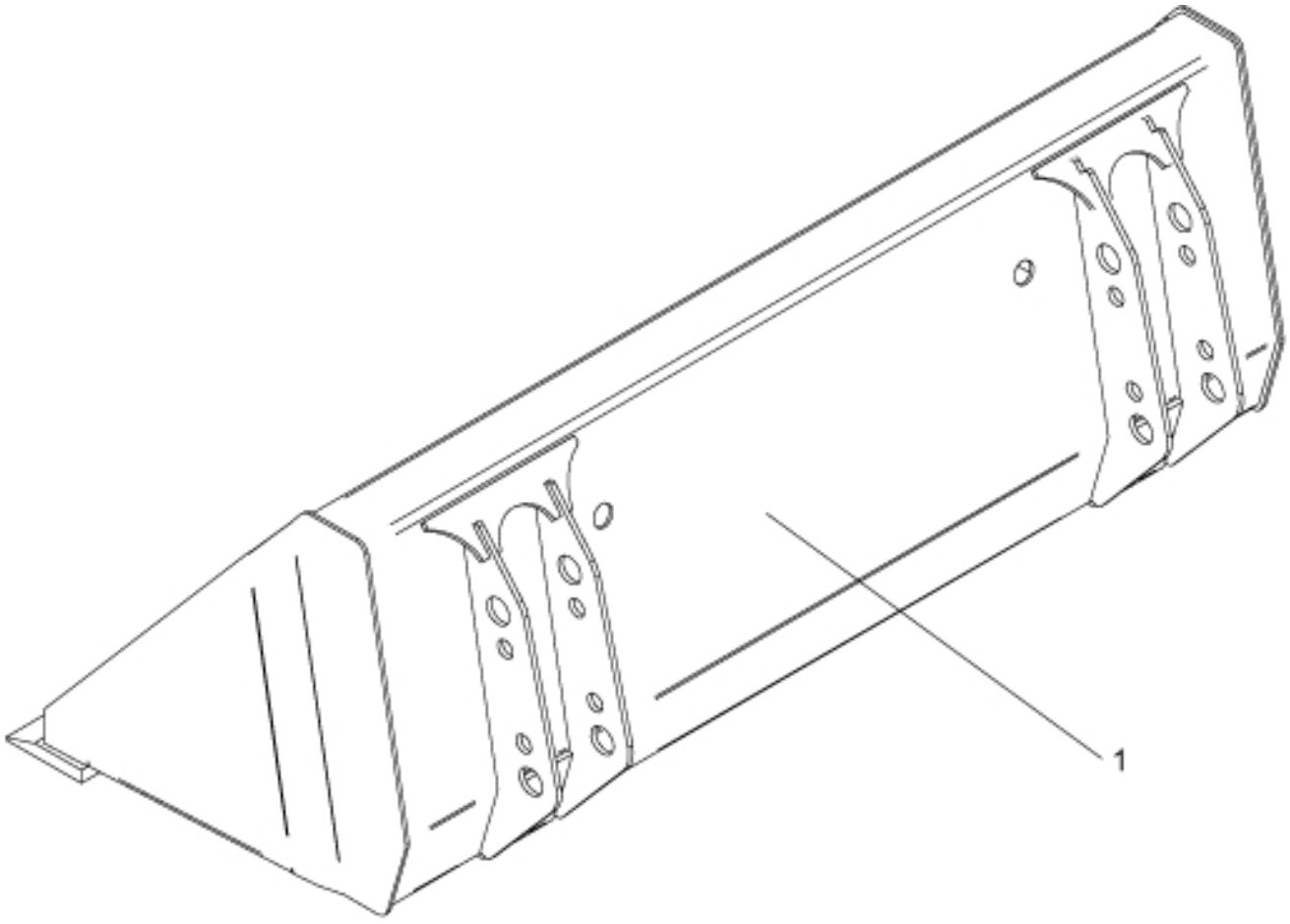


r11251730


© 2025 Jost

**Part assemblies** Bucket 120C

| PartNo | Pos | Qty | Name | Specifications |
|---|---|---|---|---|
| 11251730 | 1 | 1 PCS | Bucket 120C | |


© 2025 Jost