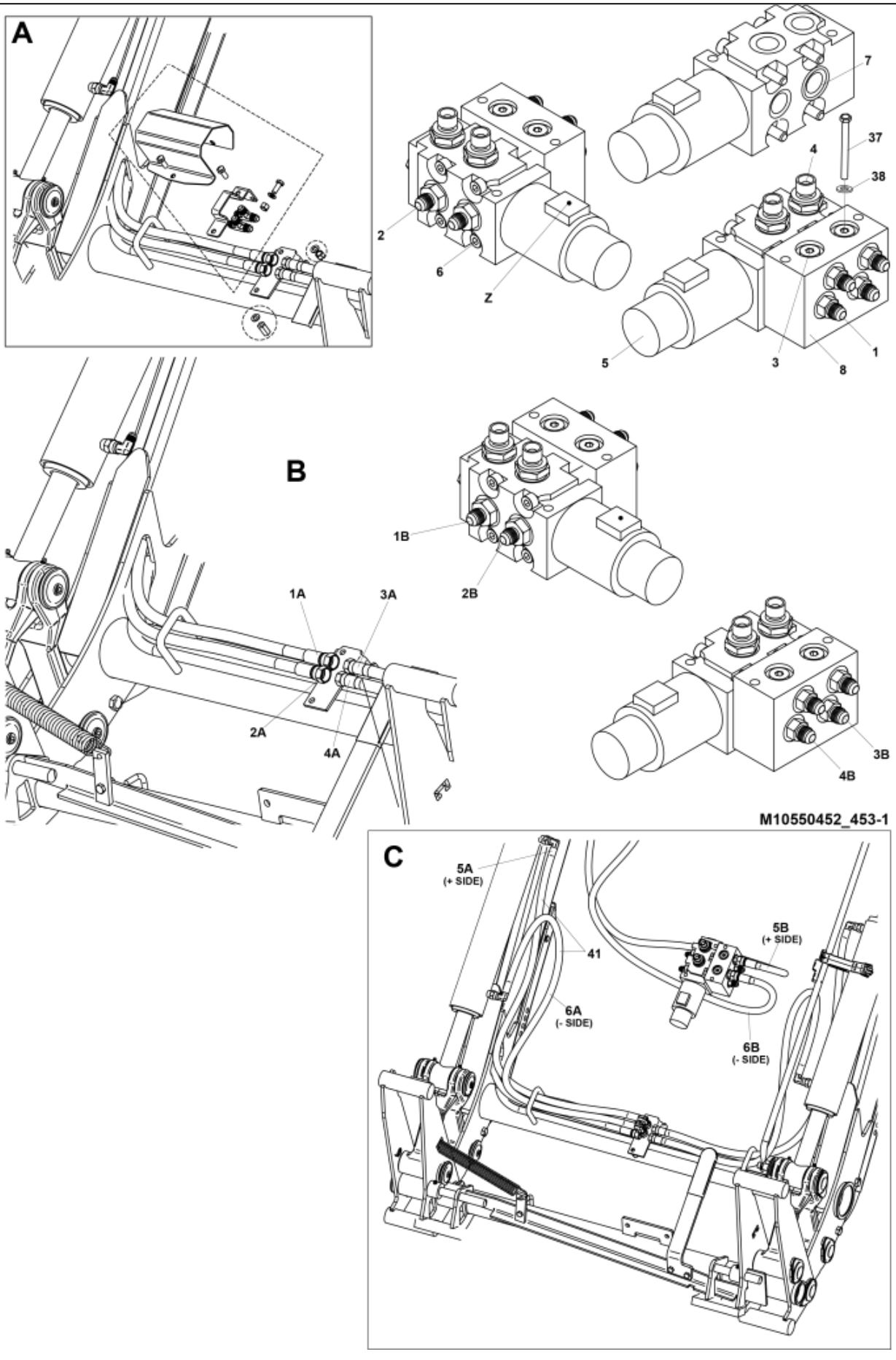
A
7
37
4
38
2
6
Z
5
3
8
1
B
1B
2B
1A
3A
2A
4A
3B
4B
M10550452_453-1
C
5A
(+ SIDE)
5B
(+ SIDE)
41
6A
(- SIDE)
6B
(- SIDE)

© 2025 Jost

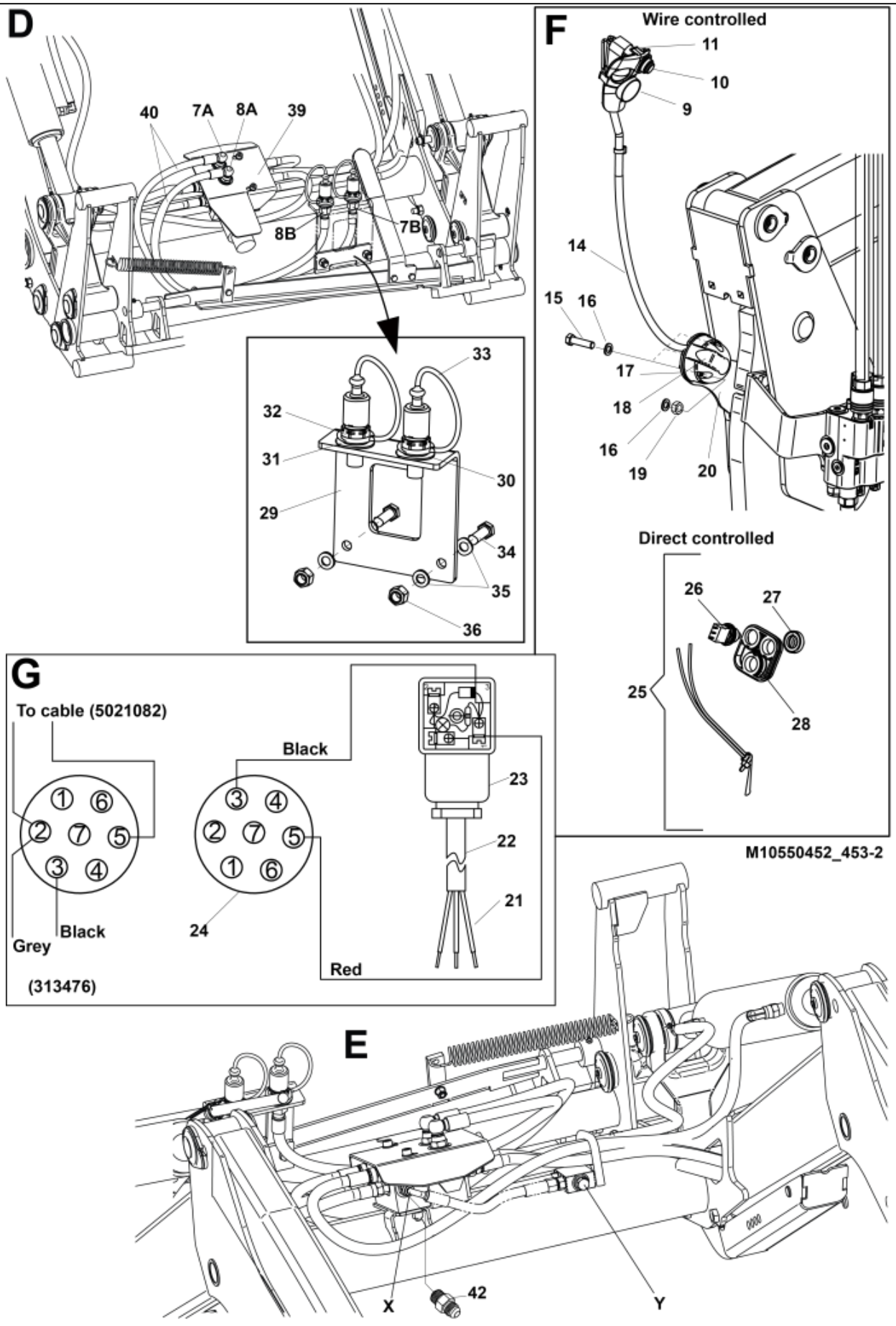
D
40
7A
8A
39
8B
7B
33
32
31
30
29
34
35
36
F
Wire controlled
11
10
9
14
15
16
17
18
16
19
20
Direct controlled
26
27
25
28
M10550452_453-2
G
To cable (5021082)
Black
23
22
21
24
Grey
Black
Red
(313476)
E
X
42
Y

© 2025 Jost

Part assemblies	3rd service - Direct
Specification	Year To: 1/31/2016 12:00:00 AM

PartNo	Pos	Qty	Name	Specifications
10550453			3rd service - Direct	1/31/2016 12:00:00 AM
10550449		1 PCS	Control valve	
5028118	1	4	• Adapter short cpl.	9/16" UNF JIC
5028119	2	2	• Adaptor	JIC 9/16 UNF 3/4
5028121	3	3	• Plug	UNF 9/16
5028151	4	2	• Adaptor	3/4" ORB - 3/8 BSP
5221387	5	1	Control valve	
5004054	6	4	• Screw	MC6S M8x80
5004056	6b	4	• Screw	M8x65
5039034	7	2	• O-ring	
10550439	8	1 PCS	Valve block	
5024205	21	1	Cable	
5102152	22	1	Cable	L=4400mm
5024376	23	1	Connector	
5024379	24	1	Connector	
5021084	25	1 PCS	Boot	1 switch
5021095	26	1 PCS	• Switch	
5021096	27	1 PCS	• Gaitor	
5021094	28	1 PCS	• Boot	0 switches
5221949		1 PCS	Bracket	
5221946	29	1 PCS	Bracket	
5022157	30	1	Washer, red	
5022159	31	1	Washer, blue	
5044940	32	2	Coupling	ISO-A 1/2" Male - G3/8
5044129	33	2	Dust Cover	1/2" Male
5002077	34	2	Screw	M6S 10x30
5013102	35	4	Washer	BRB 10 x 18 x 2
5011554	36	2	Nut	Loc-King M10
5004058	37	2 PCS	Screw	MC6S M8x100
5013101	38	2	Washer	BRB 8,4 x 16
5221954	39	1 PCS	Protection plate	
1103117	40	2	Hose	3/8"
9031913	41	1 PCS	Hose	3/8 1370 4
5028118	42	1	Adapter short cpl.	9/16" UNF JIC

© 2025 Jost