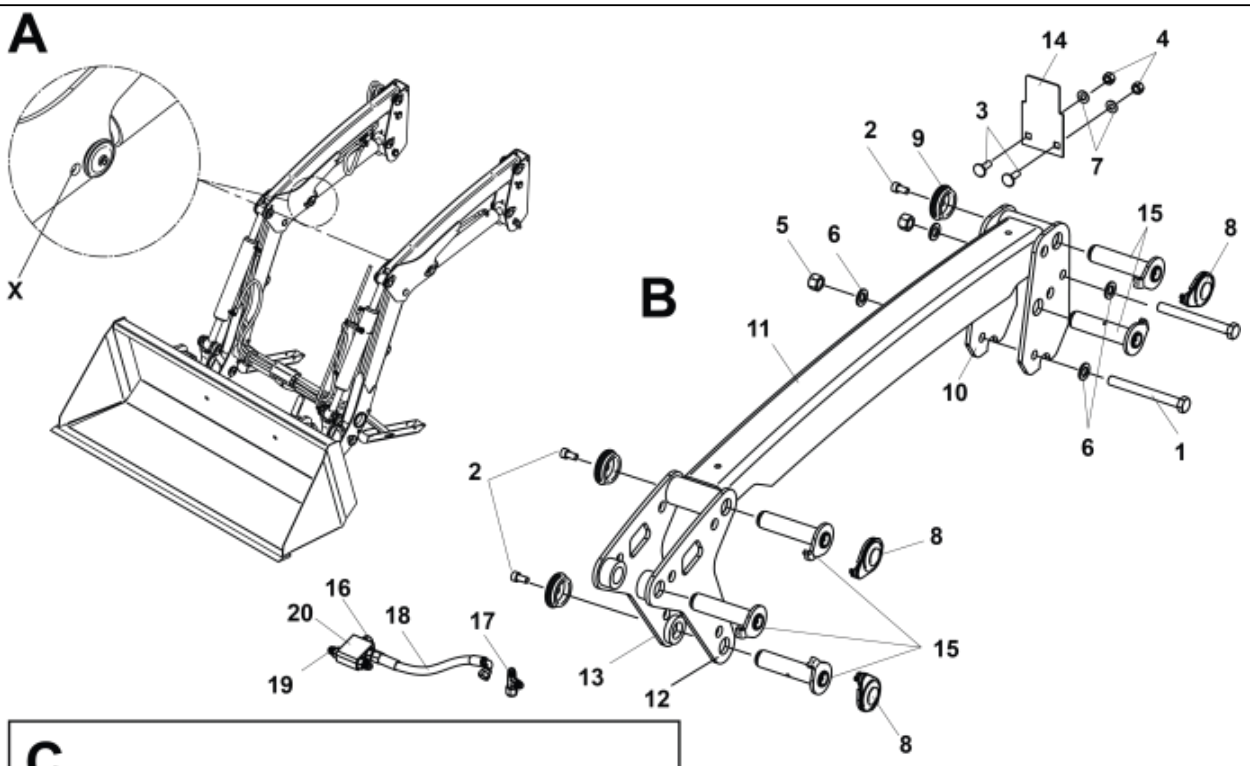

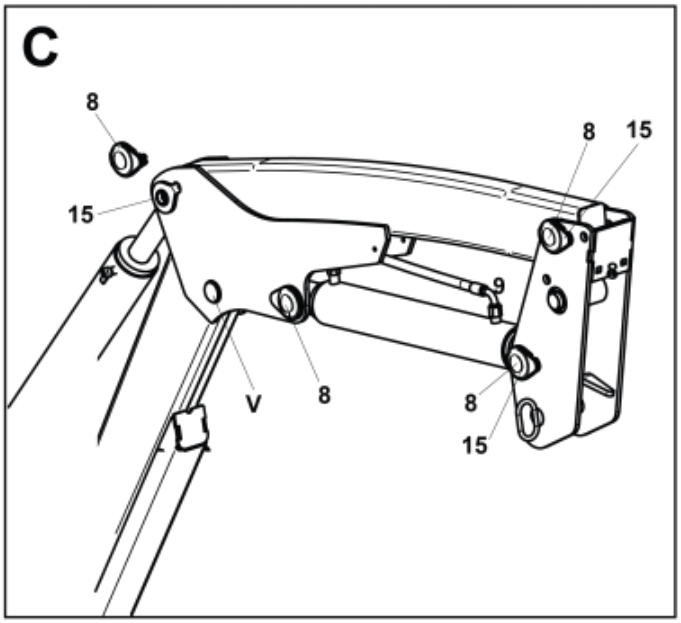

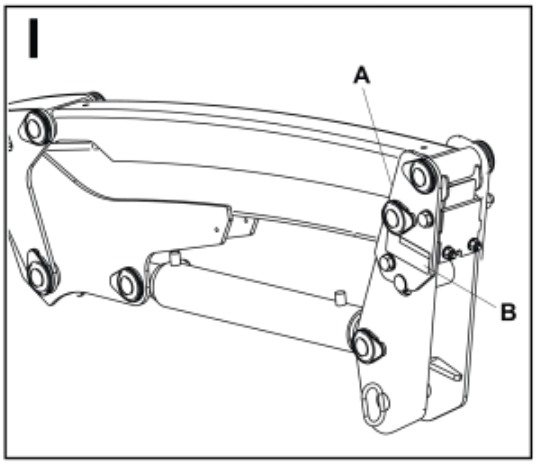

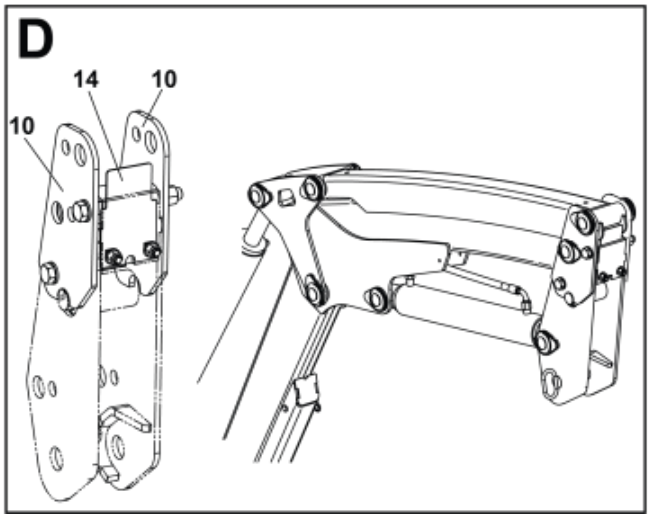

M5221797_798-1

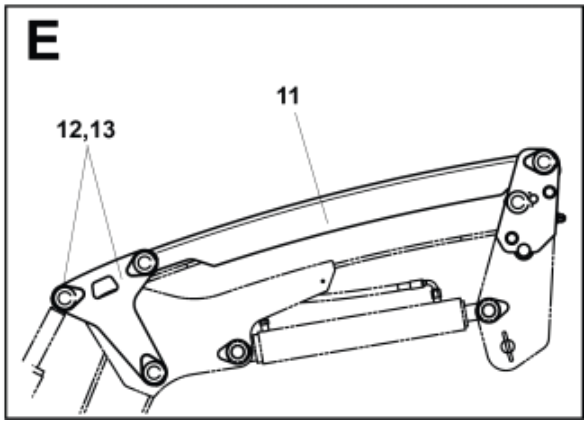

© 2025 Jost

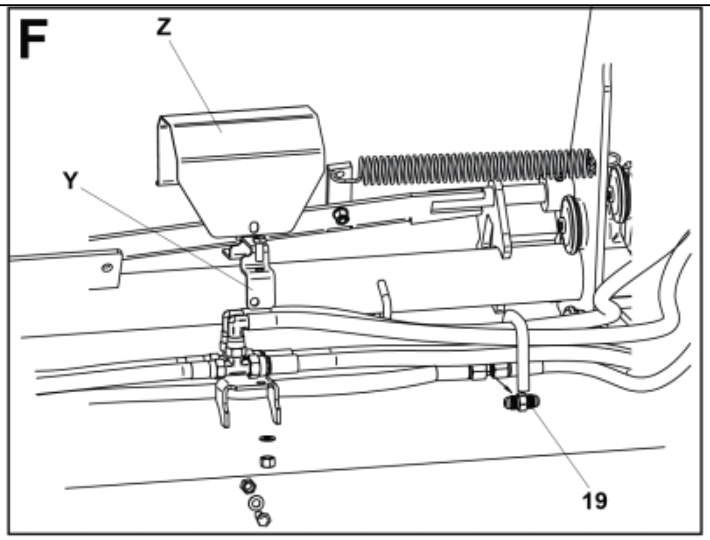

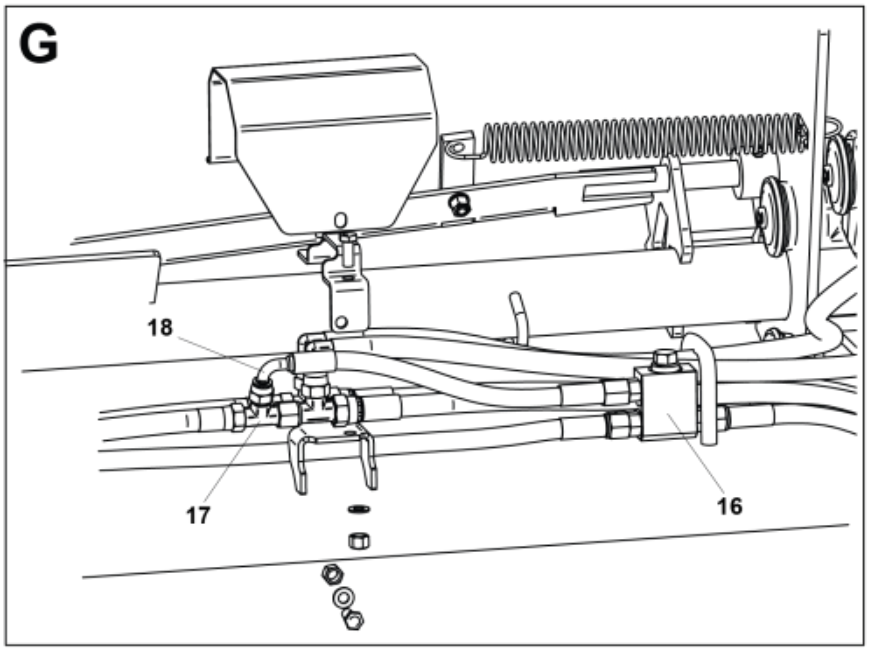

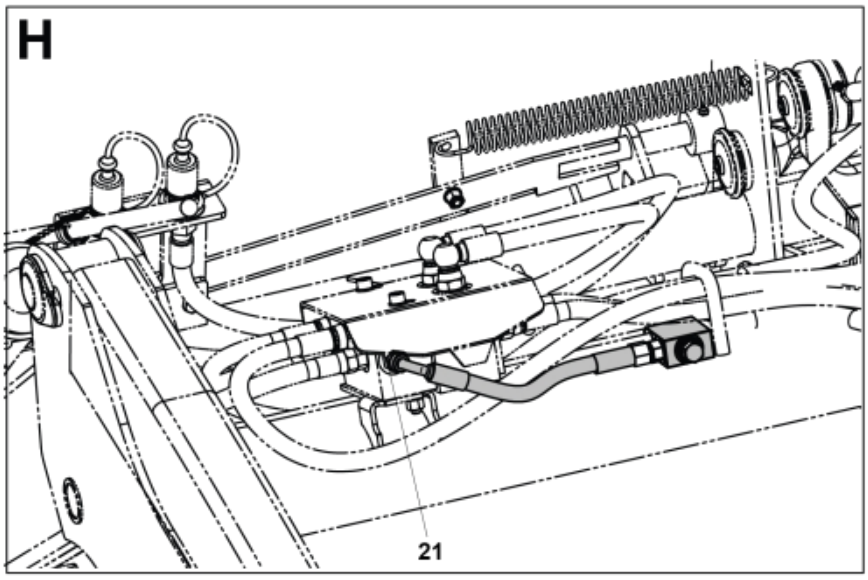

M5221797_798-2

© 2025 Jost

Part assemblies Parallel rod kit

PartNo	Pos	Qty	Name	Specifications
5221798			Parallel rod kit	
5002277	1	4 PCS	Screw	M6S_ M16 x 150 (8.8)
5004917	2	6	Screw	
5006002	3	4	Screw	MVBF 10x30
5011554	4	4	Nut	Loc-King M10
5011557	5	4	Nut	Loc-King M16
5013105	6	8	Washer	BRB 17 x 30 x 3 300HV
5013110	7	4	Washer	BRB 10.5x22x2
5215121-1	8	6	Plastic cover	Glossy Black
5215131	9	6	Locking cover	
5221888	10	4 PCS	Bracket	
5221934	11	2	Parallel rod	
5221939	12	2	Link	
5221940	13	2	Link	
5221952	14	2 PCS	Protection plate	
60018046	15	10	Pivot Pin	D=30, L=127mm
10550451		1 PCS	Pressure relief valve	
5034123	16	1 PCS	• Valve	180 bar
5028163	17	1 PCS	• Adaptor	
9032008	18	1 PCS	• Hose	1/4"
5028118	19	4	• Adapter short cpl.	9/16" UNF JIC
10550450	20	1 PCS	• Valve block	
5028118	21	1	• Adapter short cpl.	9/16" UNF JIC
11136096		1	Warning decal	
11136099		1 PCS	Warning decal	

© 2025 Jost