3 = ÄLÖ Std.
8 = EURO

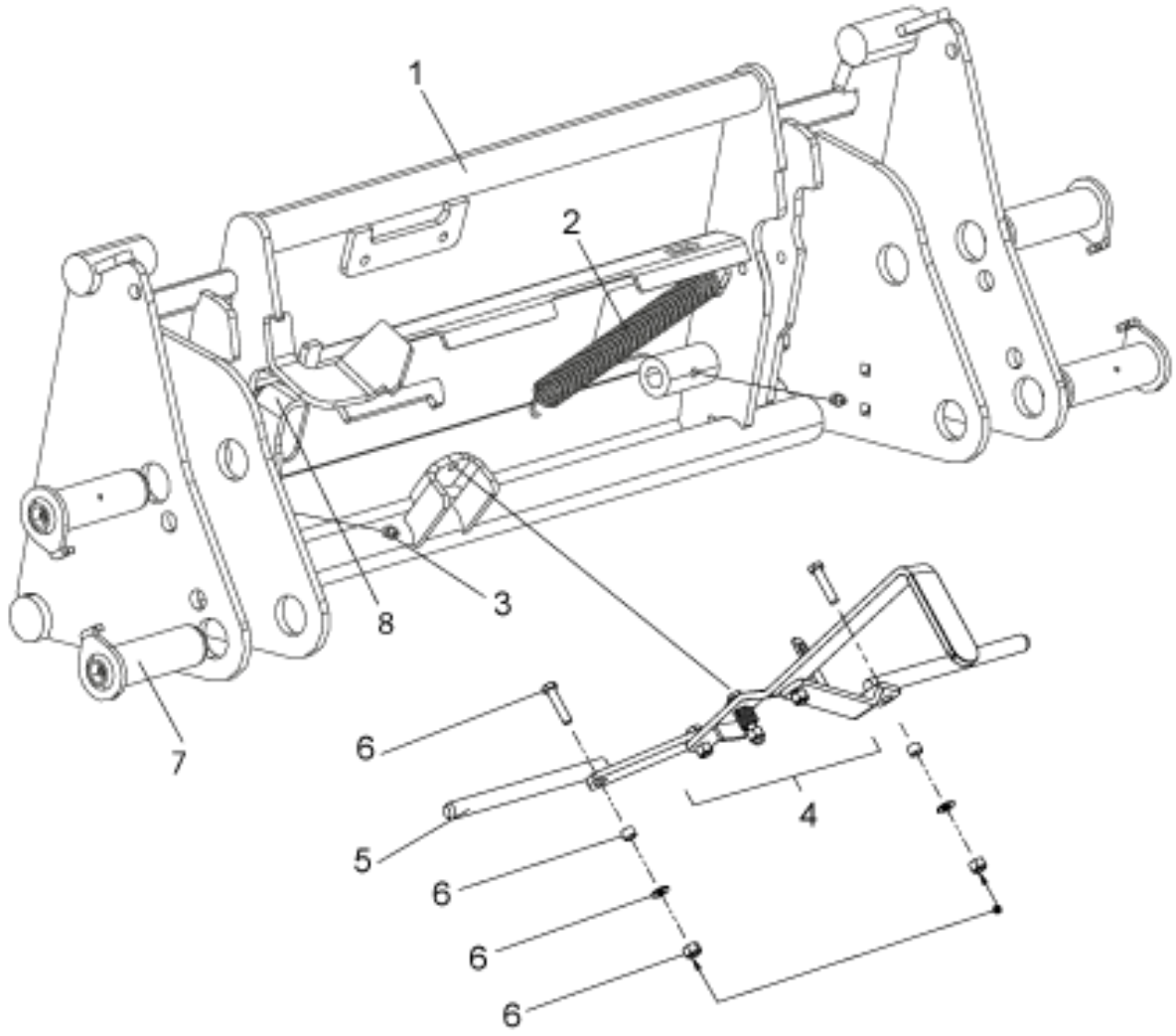

r5229832

© 2025 Jost

Description	Tool carrier
Part assemblies	Euro/Alo Type 3
Specification	Specification: Glossy Black

PartNo	Pos	Qty	Name	Specifications
5229832-1		1	Euro/Alo Type 3	Glossy Black
5229835-1	1	1	Tool carrier	Glossy Black
1101035	2	1	Spring	
5023005	3	2	Greaser	M 10 x 1
5220341	4	1	Lever kit	
4500865	5	2	Pin kit	Includes 4500867
4500867	6	2	• Screw kit	Included in Pin kit
60021067	7	1	Pin kit	Replaces 9020071
4500328	8	1	Click-on	

© 2025 Jost