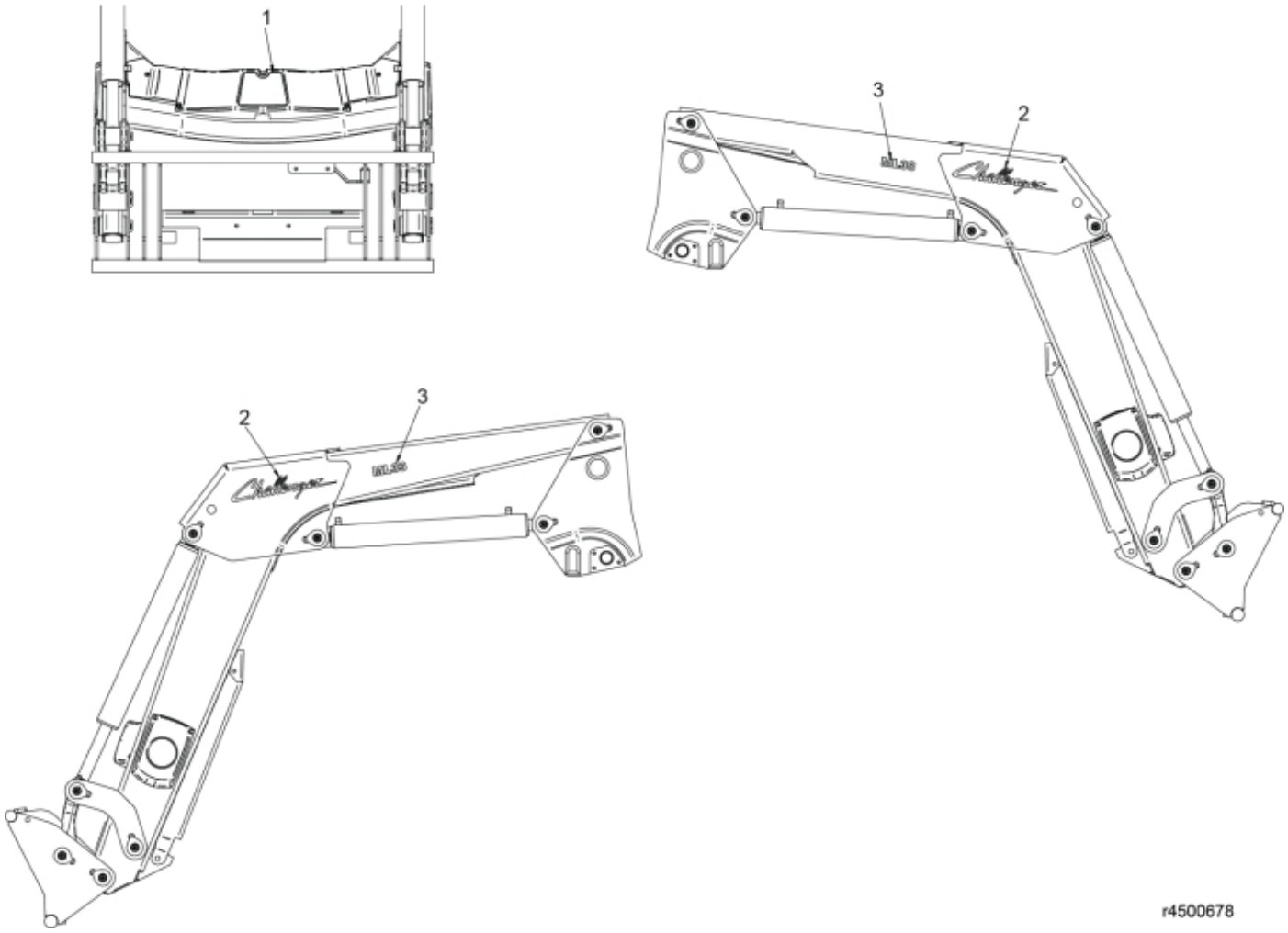

© 2025 Jost

Part assemblies Decal kit ML33

PartNo	Pos	Qty	Name	Specifications
11134273	1	1 PCS	Trapezoid decal	
11136803	2	2 PCS	Decal, Brand	
11136811	3	2 PCS	Decal, Model	

© 2025 Jost