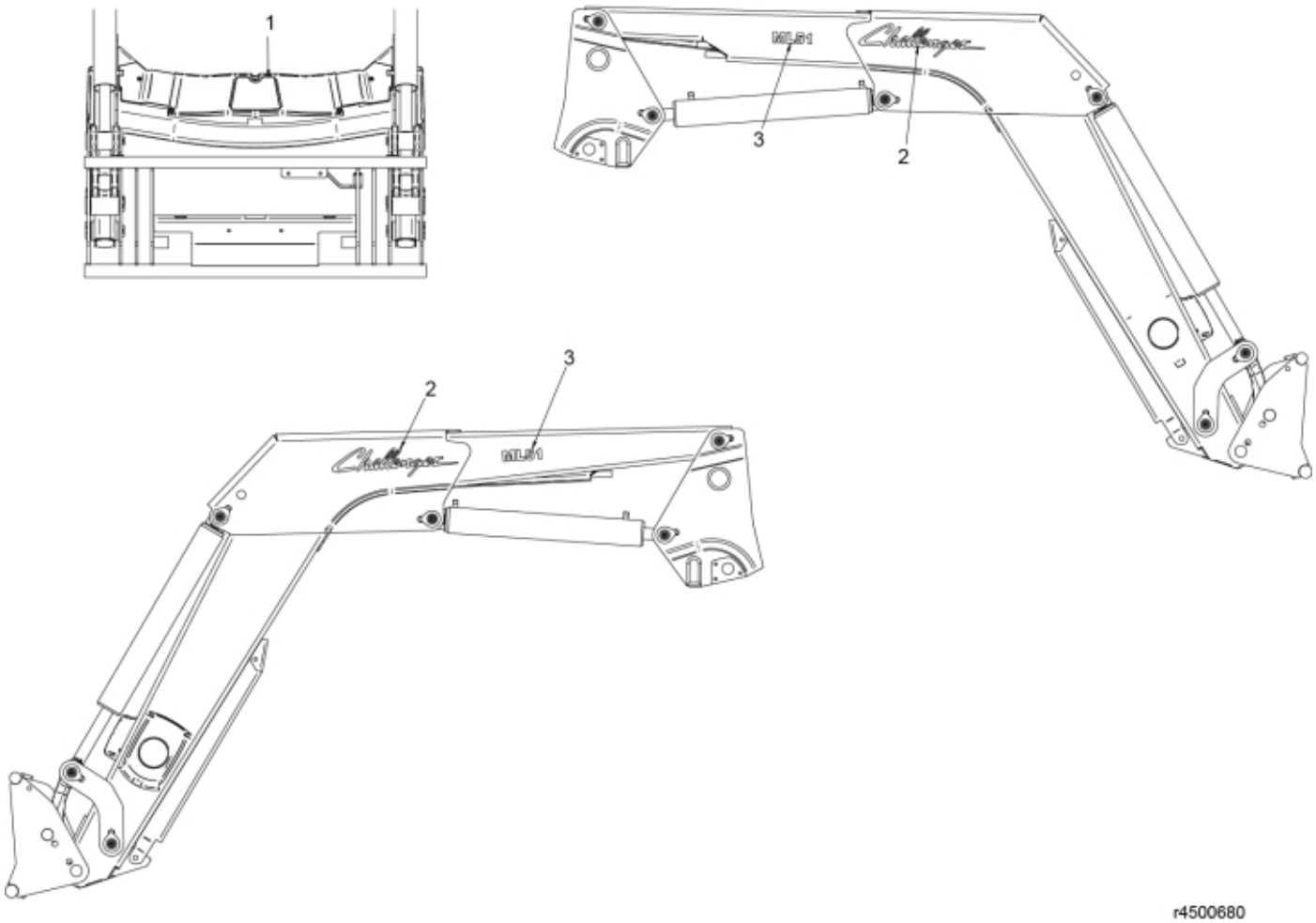



© 2025 Jost

**Part assemblies** Decal kit ML51

| PartNo | Pos | Qty | Name | Specifications |
|---|---|---|---|---|
| 11134273 | 1 | 1 PCS | Trapezoid decal | |
| 11136805 | 2 | 2 PCS | Decal, Brand | |
| 11136815 | 3 | 2 PCS | Decal, Model | |


© 2025 Jost