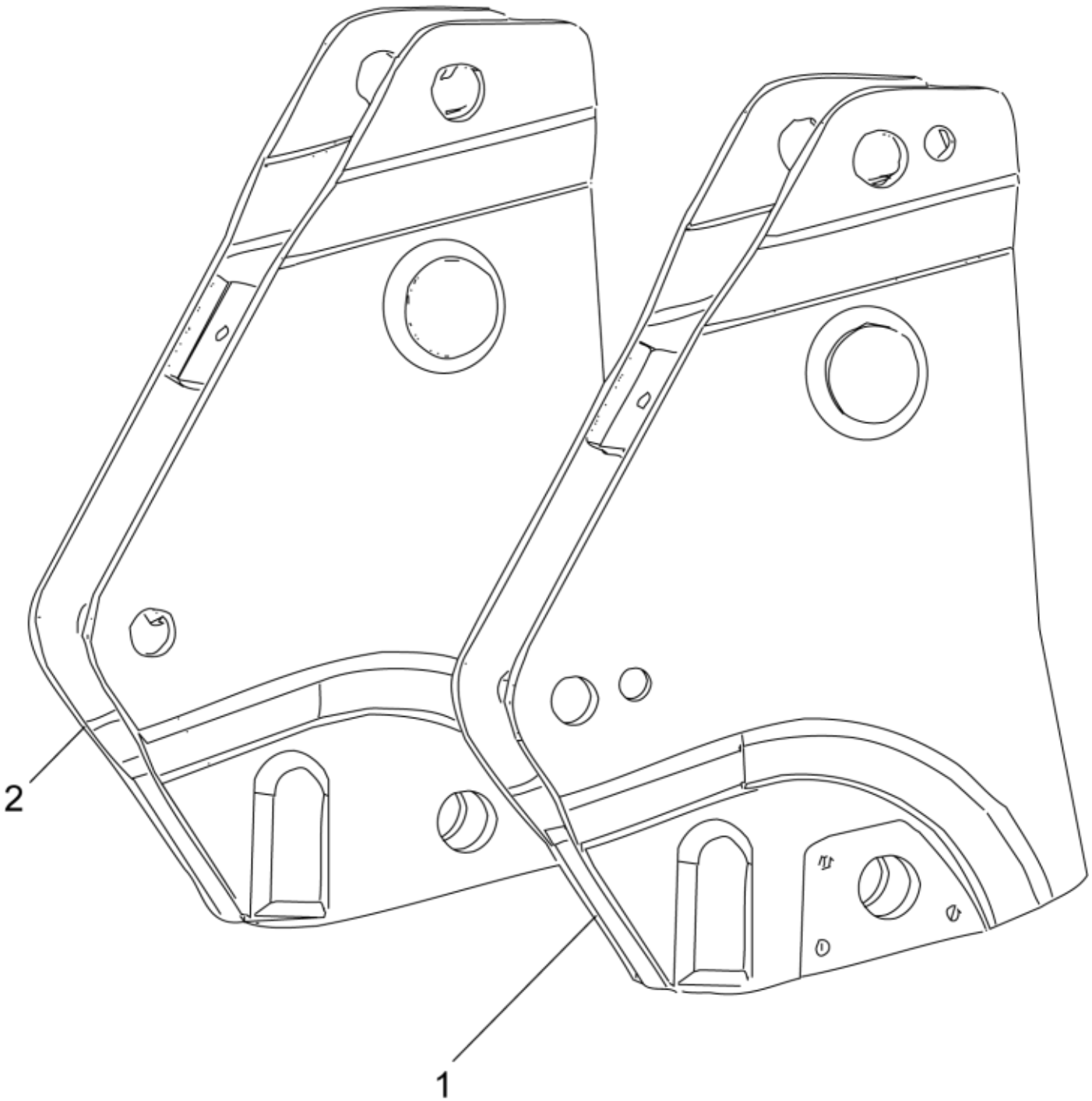

r5212514_5212524

© 2025 Jost

Part assemblies		Bearing boxes		
Specification		Specification: New Holland Blue		
PartNo	**Pos**	**Qty**	**Name**	**Specifications**
5220205-11		1	Bearing boxes	New Holland Blue
5212514-11	1	1	• Bearing box LH	New Holland Blue
5212524-11	2	1	• Bearing box RH	New Holland Blue

© 2025 Jost