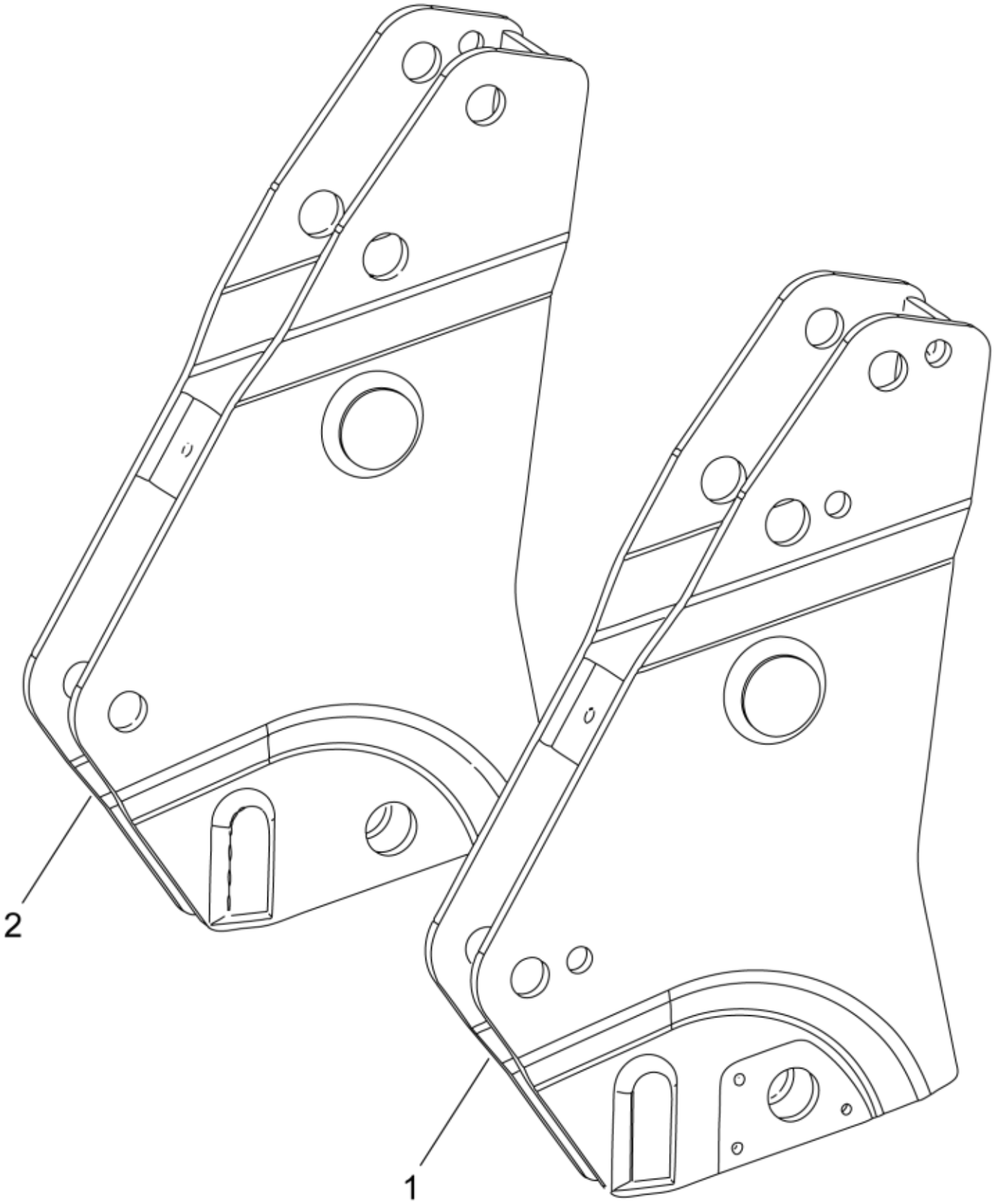


r5212513_5212523


© 2025 Jost

| | | | | |
|---|---|---|---|---|
| **Part assemblies** | | Bearing boxes | | |
| **Specification** | | Specification: New Holland Blue | | |
| **PartNo** | **Pos** | **Qty** | **Name** | **Specifications** |
| 5220193-11 | | 1 | Bearing boxes | New Holland Blue |
| 5212511-11 | 1 | 1 | • Bearing box LH | New Holland Blue |
| 5212521-11 | 2 | 1 | • Bearing box RH | New Holland Blue |


© 2025 Jost