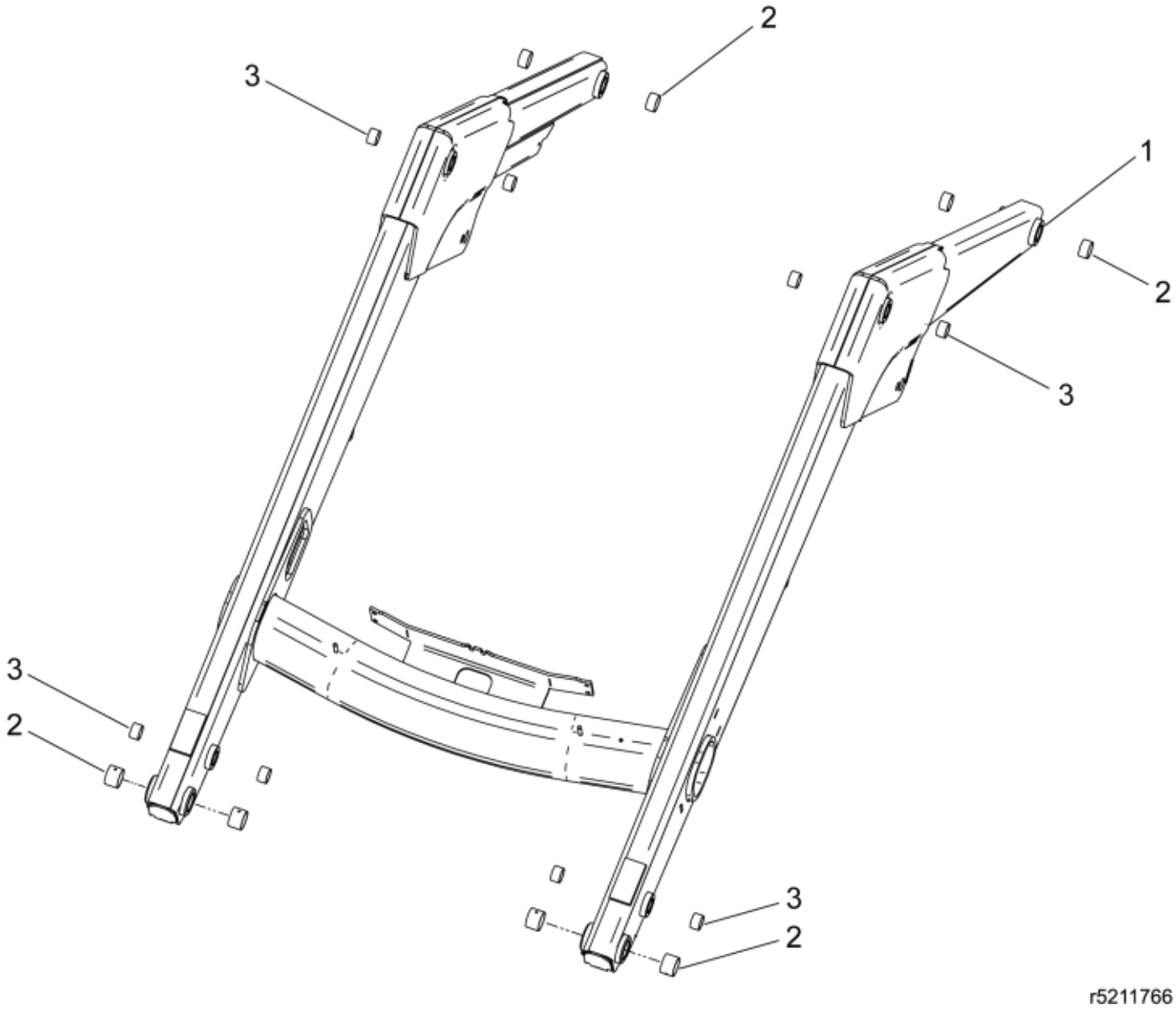

© 2025 Jost

Part assemblies	Loader beam w. bushings
Specification	Specification: New Holland Blue

PartNo	Pos	Qty	Name	Specifications
5211764-11	1	1	Loader beam w. bushings	New Holland Blue
5018904	2	8	• Bushing	D40 L=30
5018514	3	8	• Bushing	D35 L=20

© 2025 Jost