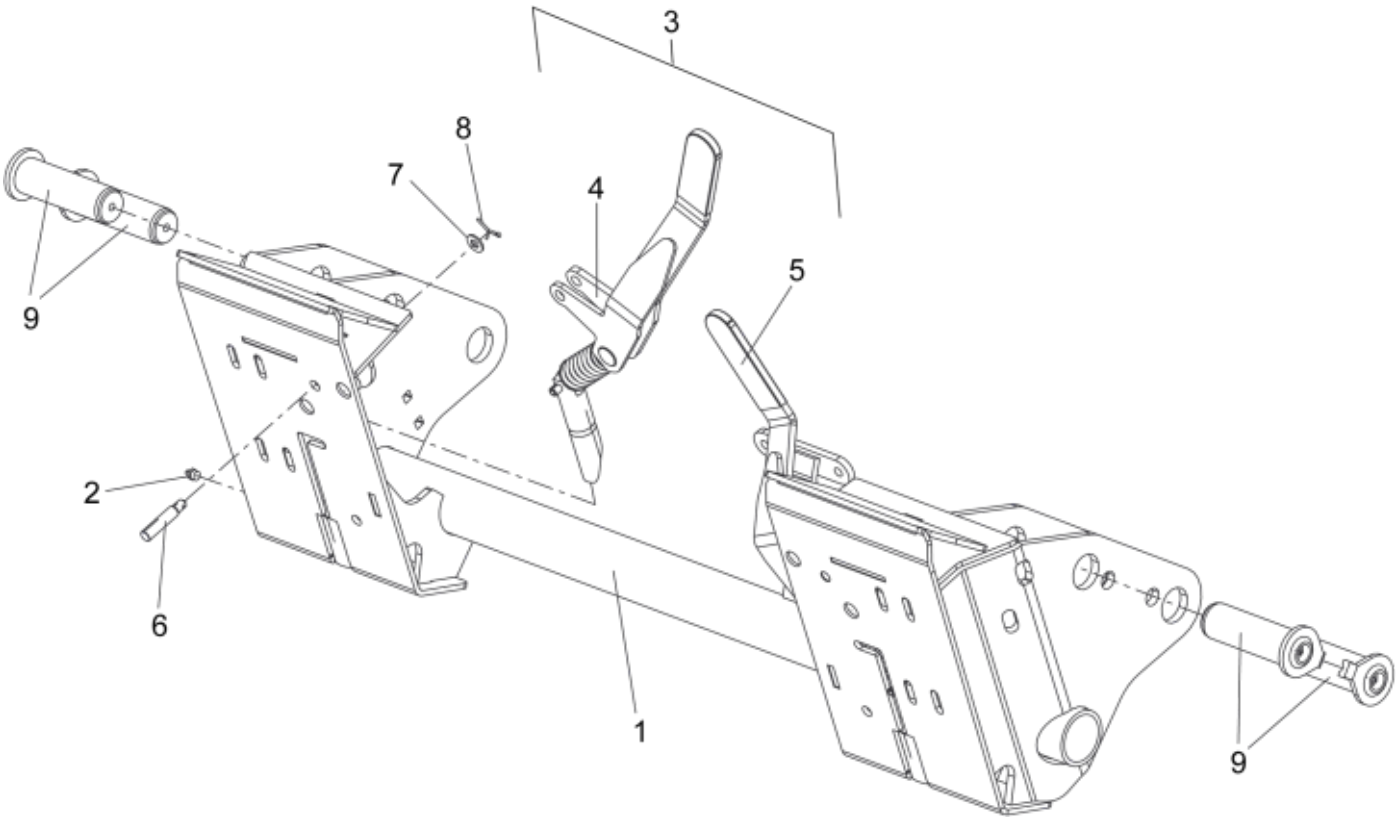

© 2025 Jost

Description	Tool carrier
Part assemblies	Skid Steer DM

PartNo	Pos	Qty	Name	Specifications
5220447-13		1	Skid Steer DM	
5220419-13	1	1	Tool carrier	Case Red
5023005	2	2	Greaser	M 10 x 1
5220468	3	1 PCS	Lever kit	
4500408	4	1	• Locking mechanism RH	
4500407	5	1	• Locking mechanism LH	
5220448	6	2	Pin	
5013110	7	2	Washer	BRB 10.5x22x2
5016997	8	2	Split pin	
60021067	9	1	Pin kit	Replaces 9020071

© 2025 Jost