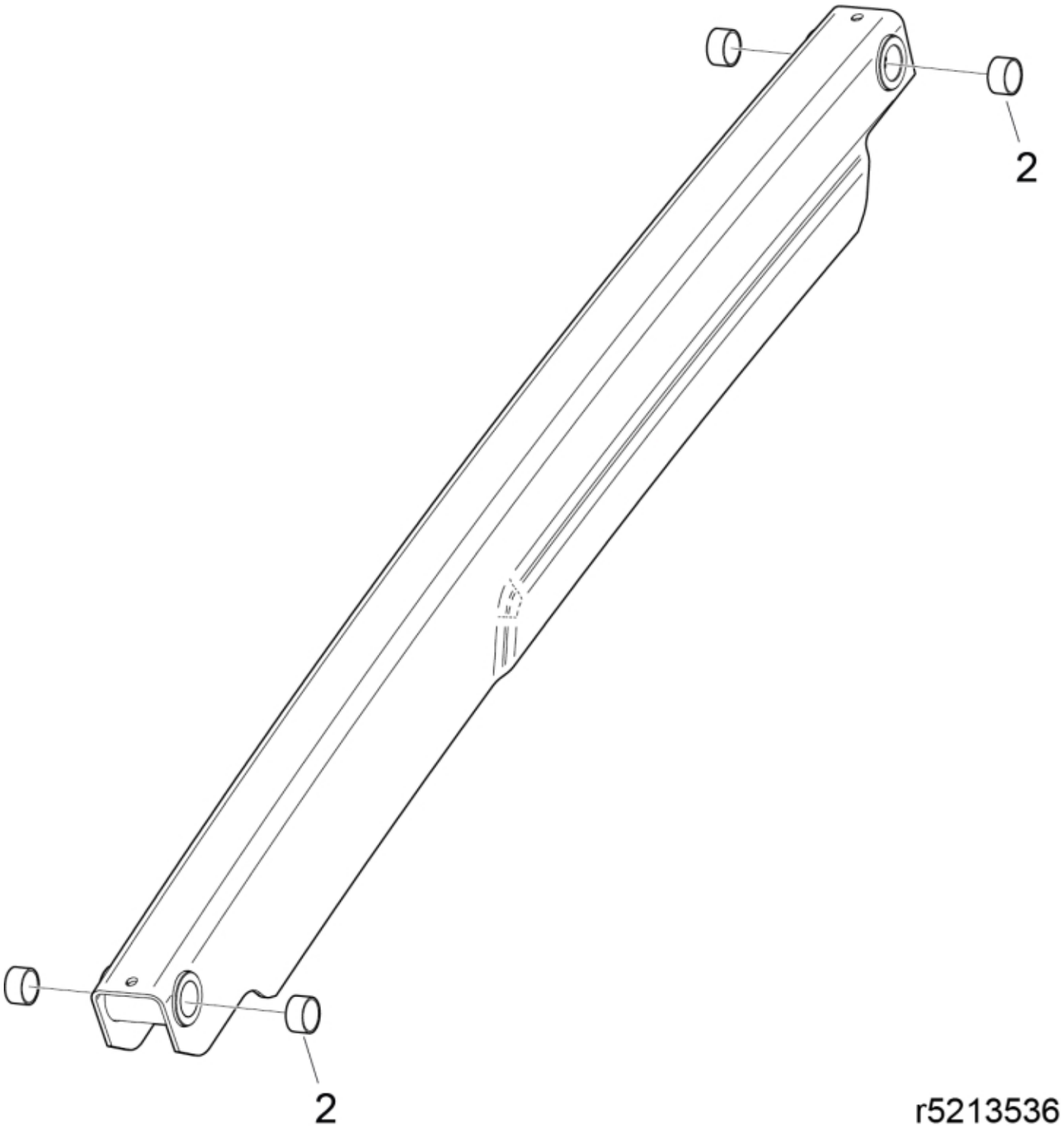

© 2025 Jost

Part assemblies	Parallel rod w. bushings
Specification	Specification: Case Red

PartNo	Pos	Qty	Name	Specifications
5018515	2	4	Bushing	D30 L=20

© 2025 Jost