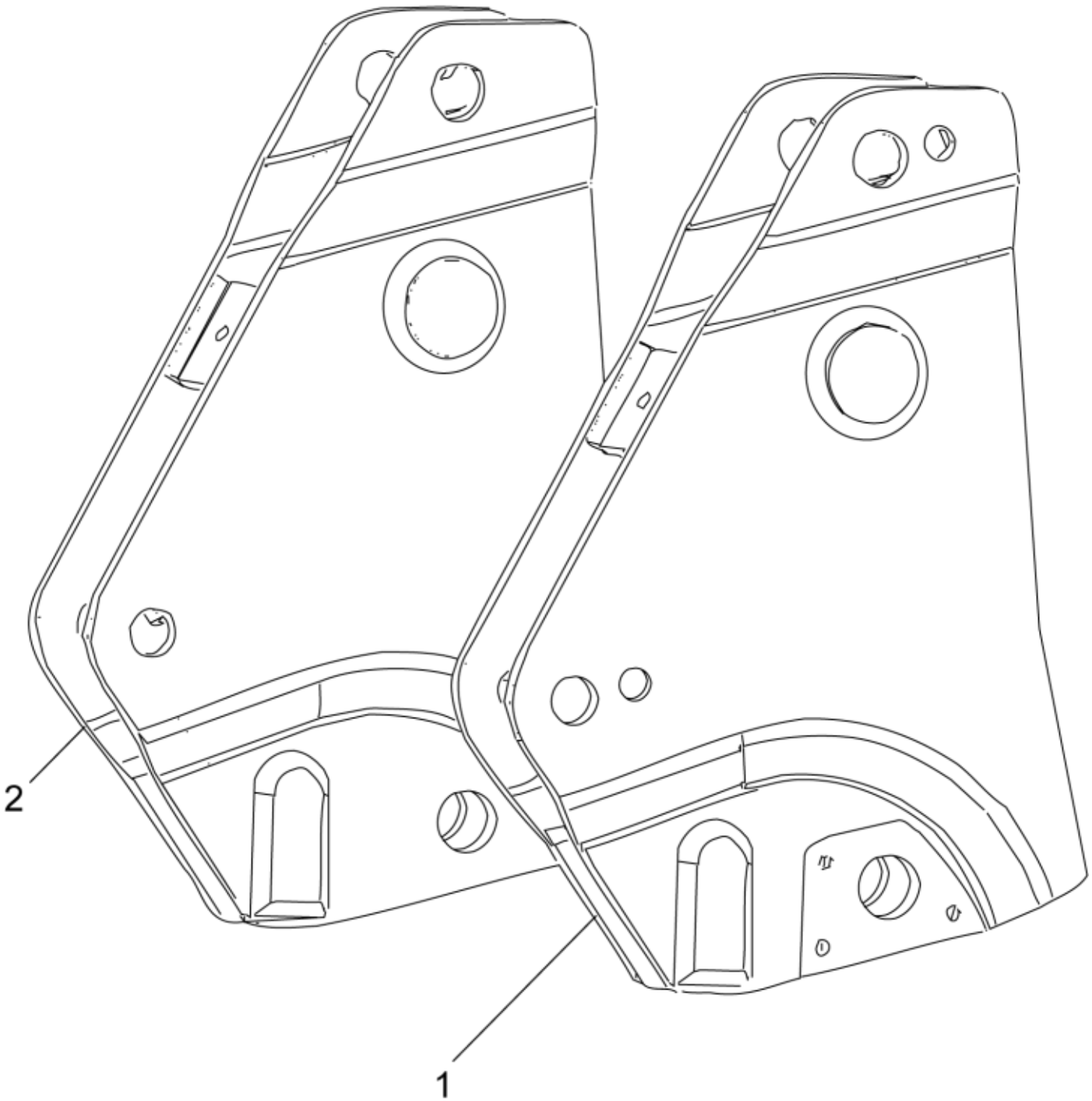


r5212514_5212524


© 2025 Jost

| | | | | |
|---|---|---|---|---|
| **Part assemblies** | | Bearing boxes | | |
| **Specification** | | Specification: Case Red | | |
| **PartNo** | **Pos** | **Qty** | **Name** | **Specifications** |
| 5220209-13 | | 1 | Bearing boxes | Case Red |
| 5212510-13 | 1 | 1 | • Bearing box LH | Case Red |
| 5212520-13 | 2 | 1 | • Bearing box RH | Case Red |


© 2025 Jost