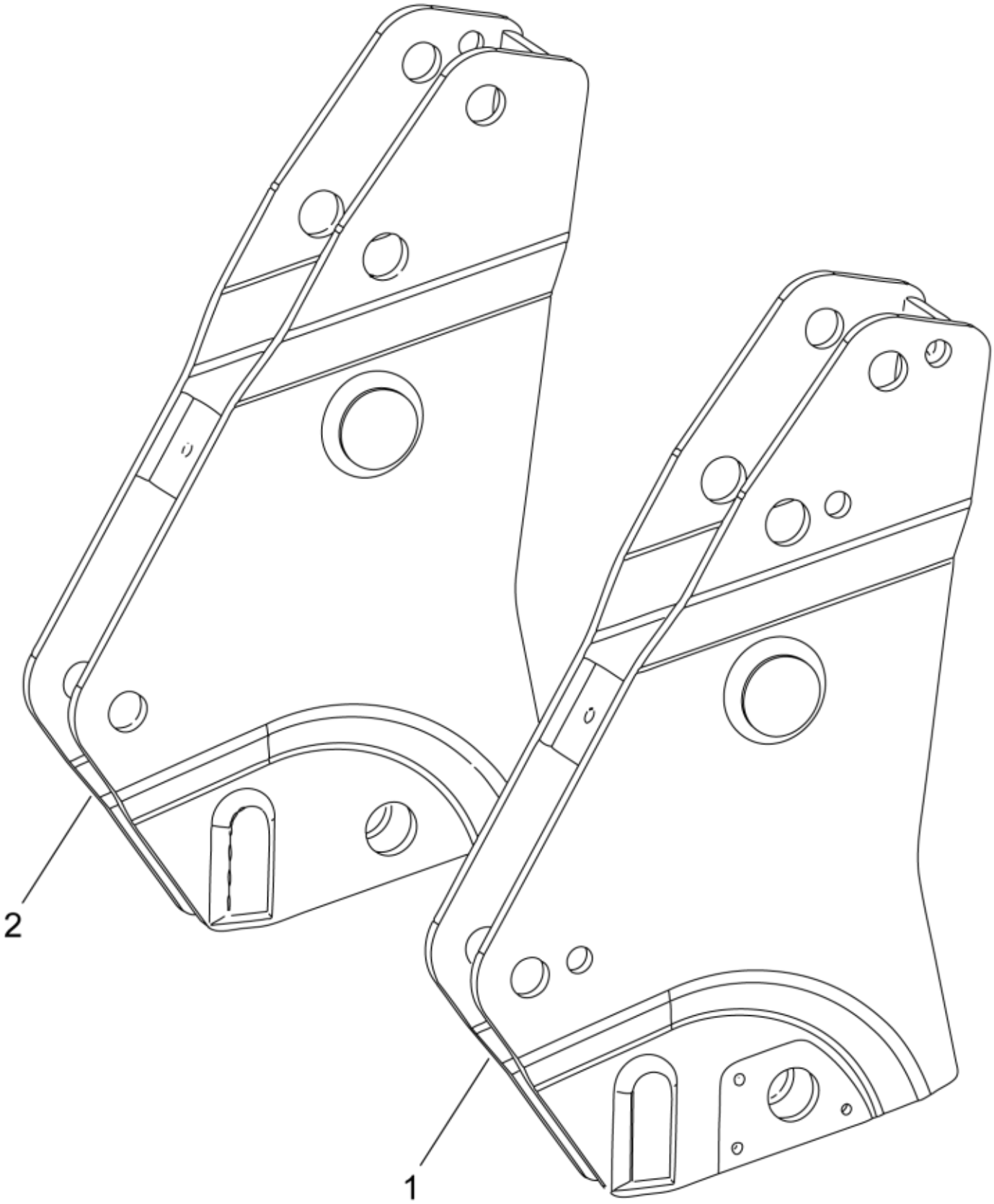

r5212513_5212523

© 2025 Jost

Part assemblies		Bearing boxes		
Specification		Specification: Case Red		
PartNo	**Pos**	**Qty**	**Name**	**Specifications**
5220198-13		1	Bearing boxes	Case Red
5212512-13	1	1	• Bearing box LH	Case Red
5212522-13	2	1	• Bearing box RH	Case Red

© 2025 Jost