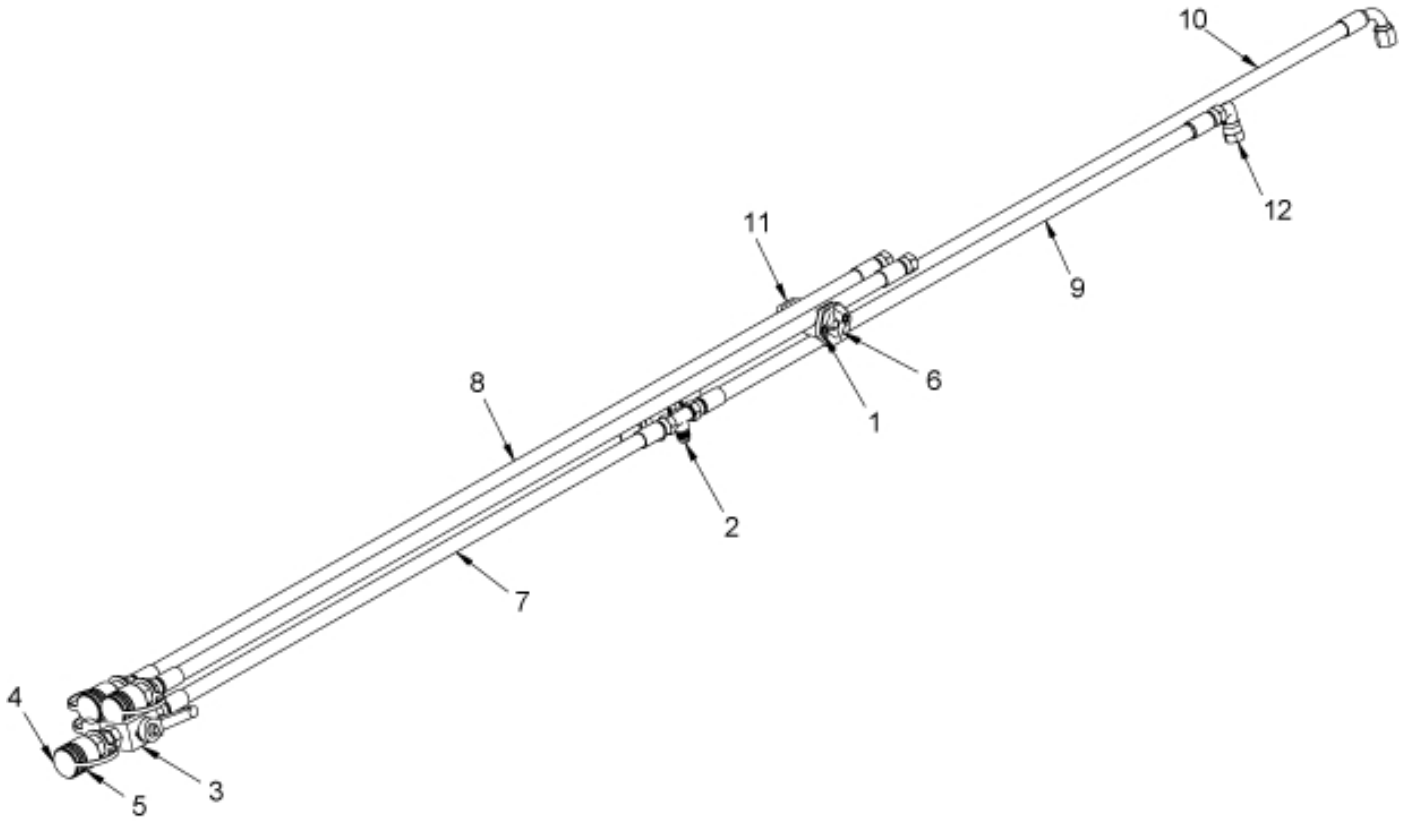

r9031935

© 2025 Jost

Part assemblies Main hose kit

PartNo	Pos	Qty	Name	Specifications
5004947	1	2	Screw	MC6S M6x50
5028142	2	2	Adaptor	JIC 2x9/16 1x3/4
5034110	3	1	Shut off	3/4" JIC
5034111	4	4	Dust Cover	ISO 3/8"
5044973	5	4	Quick Coupling	ISO-A Coupling 3/8"
5221919	6	2	Hose clamp	
9031699	7	2 PCS	Hose	1/2" L=850mm
9031721	8	2 PCS	Hose	1/2" L=3335mm
9031714	9	1	Hose	3/8" L=4350mm
9031718	10	1	Hose	3/8" L=4900mm
20708137	11	2	Nut	M6 FZB, 708137
5028051	12	1	Adaptor	UNF 9/16 -18 JIC 37° female 90°

© 2025 Jost