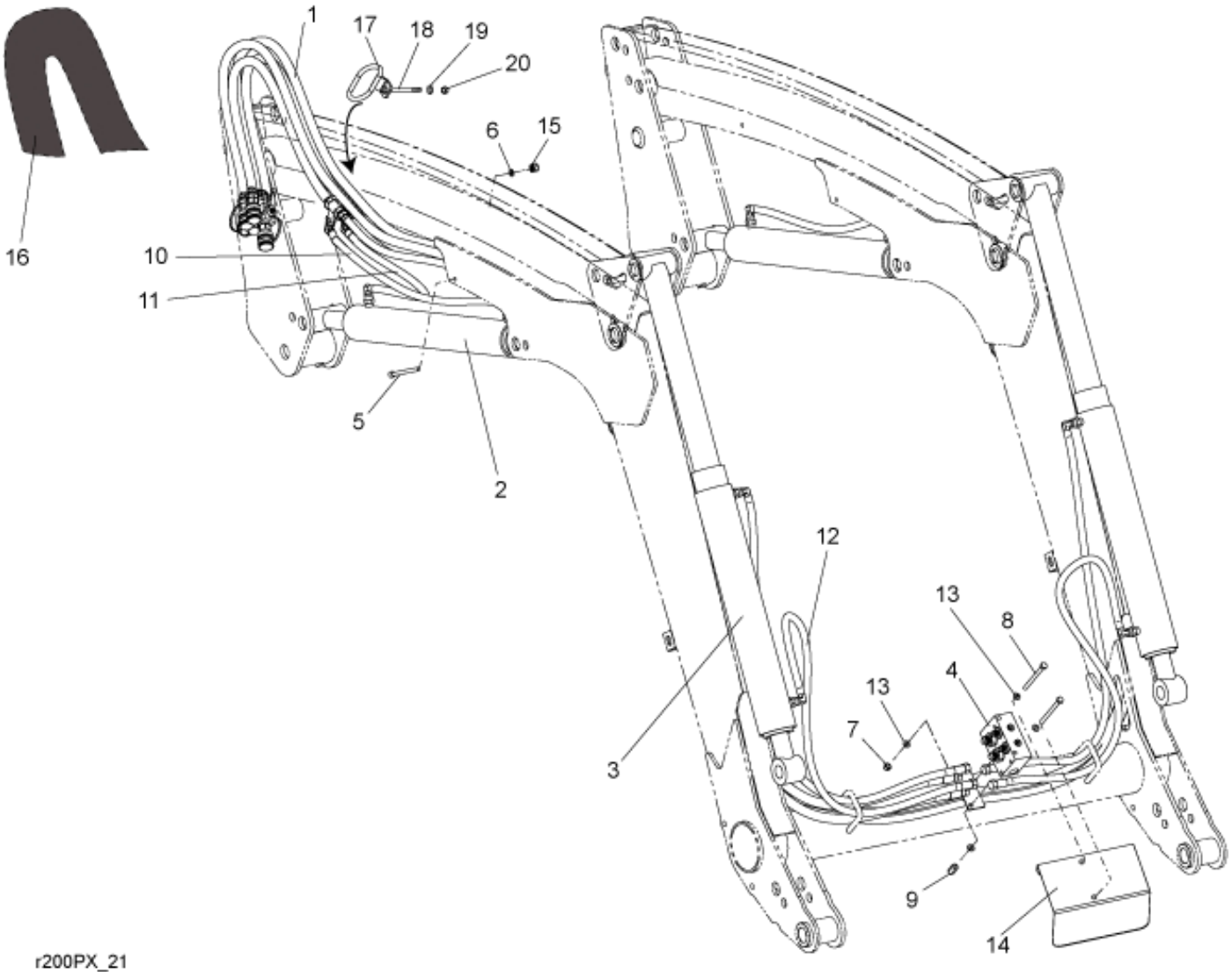


r200PX_21


© 2025 Jost

| | |
|---|---|
| **Part assemblies** | Hydraulics |
| **Specification** | Year From: 11/1/2011 12:00:00 AM |

| PartNo | Pos | Qty | Name | Specifications |
|---|---|---|---|---|
| 9031935 | 1 | 1 PCS | Main hose kit | |
| 12717310-1 | 2 | 2 | Cylinder | Glossy Black |
| 12718110-1 | 3 | 2 | Tilt Cylinder | Glossy Black |
| 10550406 | 4 | 1 PCS | Diverter valve cpl. | |
| 5004945 | 5 | 1 PCS | Screw | MC6S 6x90 |
| 5013111 | 6 | 1 | Washer | BRB 6,4 x 14 |
| 5011553 | 7 | 1 | Nut | M6M M8 Loc-king |
| 5002978 | 8 | 2 | Screw | M6S 8x129 |
| 5011928 | 9 | 1 PCS | Nut | M8 |
| 9031939 | 10 | 1 | Hose | 3/8" L=520mm |
| 9031710 | 11 | 1 | Hose | 3/8" L=520mm |
| 9031723 | 12 | 4 | Hose | 3/8" |
| 5013101 | 13 | 8 | Washer | BRB 8,4 x 16 |
| 5221561 | 14 | 1 PCS | Protection plate | |
| 5011552 | 15 | 1 | Locking nut | M6 Locking |
| 5221891 | 16 | 1 | Hose cover | L=600mm |
| 5221966 | 17 | 1 | Hose guide | |
| 5002064 | 18 | 1 | Screw | M6S 8x80 |
| 5013101 | 19 | 1 | Washer | BRB 8,4 x 16 |
| 5011553 | 20 | 1 | Nut | M6M M8 Loc-king |


© 2025 Jost