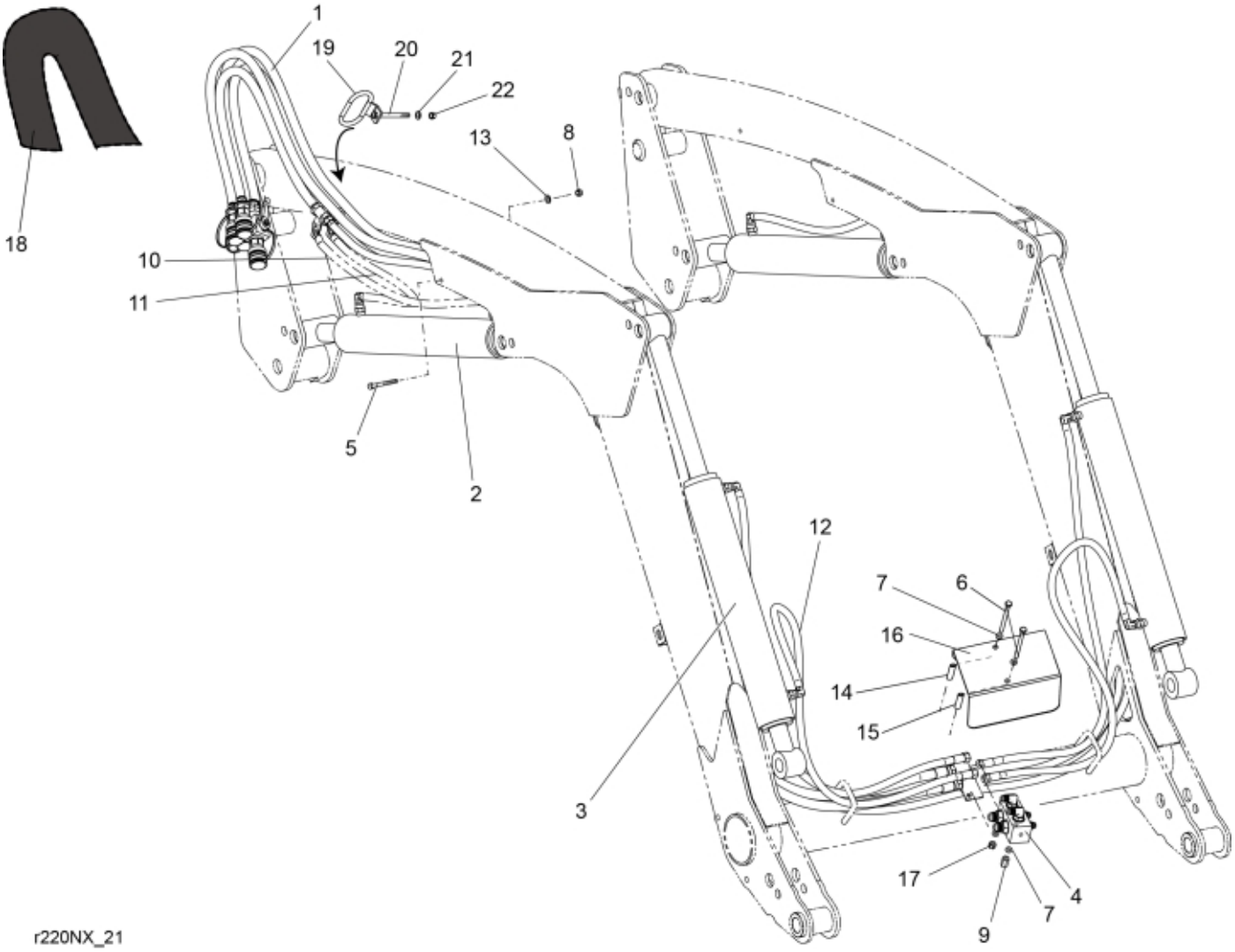

© 2025 Jost

Part assemblies	Hydraulics
Specification	Year From: 11/1/2011 12:00:00 AM

PartNo	Pos	Qty	Name	Specifications
9031937	1	1 PCS	Main hose kit	
12717610-1	2	2	Cylinder	Glossy Black
12718410-1	3	2	Cylinder	Glossy Black
10550412	4	1 PCS	Distribution block cpl.	
5004945	5	1 PCS	Screw	MC6S 6x90
5002978	6	2	Screw	M6S 8x129
5013101	7	4	Washer	BRB 8,4 x 16
5011552	8	1	Locking nut	M6 Locking
5011928	9	1 PCS	Nut	M8
9031940	10	1	Hose	3/8"
9031710	11	1	Hose	3/8" L=520mm
9031723	12	4	Hose	3/8"
5013111	13	1	Washer	BRB 6,4 x 14
5221562	14	1 PCS	Spacer	
5221563	15	1 PCS	Spacer	
5221561	16	1 PCS	Protection plate	
5011553	17	1	Nut	M6M M8 Loc-king
5221891	18	1	Hose cover	L=600mm
5221966	19	1	Hose guide	
5002064	20	1	Screw	M6S 8x80
5013101	21	1	Washer	BRB 8,4 x 16
5011553	22	1	Nut	M6M M8 Loc-king

© 2025 Jost