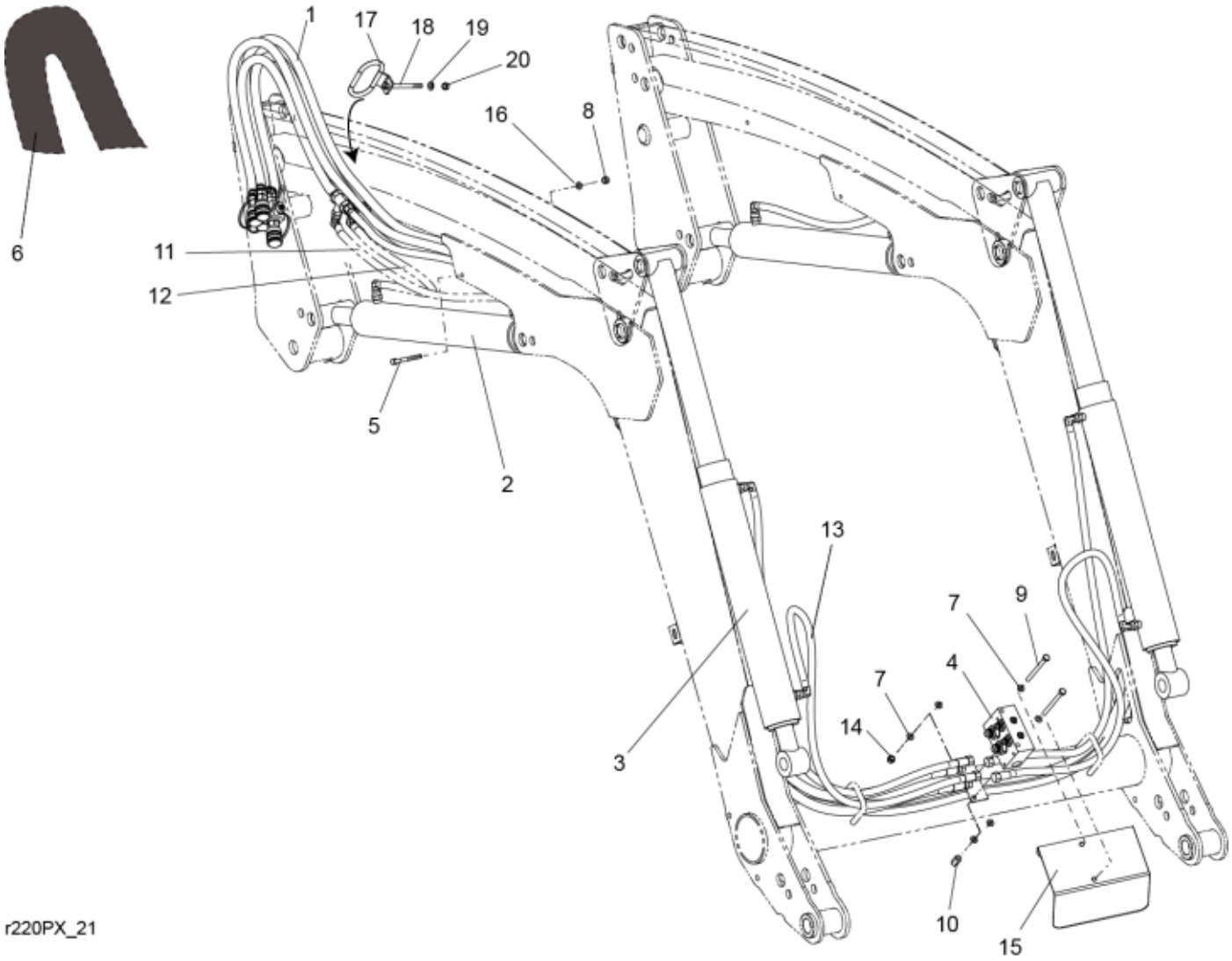

r220PX_21

© 2025 Jost

Part assemblies	Hydraulics
Specification	Year From: 11/1/2011 12:00:00 AM

PartNo	Pos	Qty	Name	Specifications
9031938	1	1 PCS	Main hose kit	
12717710-1	2	2	Cylinder	Glossy Black
60047994-1	3	2	Tilt Cylinder	Glossy Black. Replaces 12718710-1
10550406	4	1 PCS	Diverter valve cpl.	
5004945	5	1 PCS	Screw	MC6S 6x90
5221891	6	1	Hose cover	L=600mm
5013101	7	8	Washer	BRB 8,4 x 16
5011552	8	1	Locking nut	M6 Locking
5002978	9	2	Screw	M6S 8x129
5011928	10	1 PCS	Nut	M8
9031940	11	1	Hose	3/8"
9031710	12	1	Hose	3/8" L=520mm
9031723	13	4	Hose	3/8"
5011553	14	1	Nut	M6M M8 Loc-king
5221561	15	1 PCS	Protection plate	
5013111	16	1	Washer	BRB 6,4 x 14
5221966	17	1	Hose guide	
5002064	18	1	Screw	M6S 8x80
5013101	19	1	Washer	BRB 8,4 x 16
5011553	20	1	Nut	M6M M8 Loc-king

© 2025 Jost