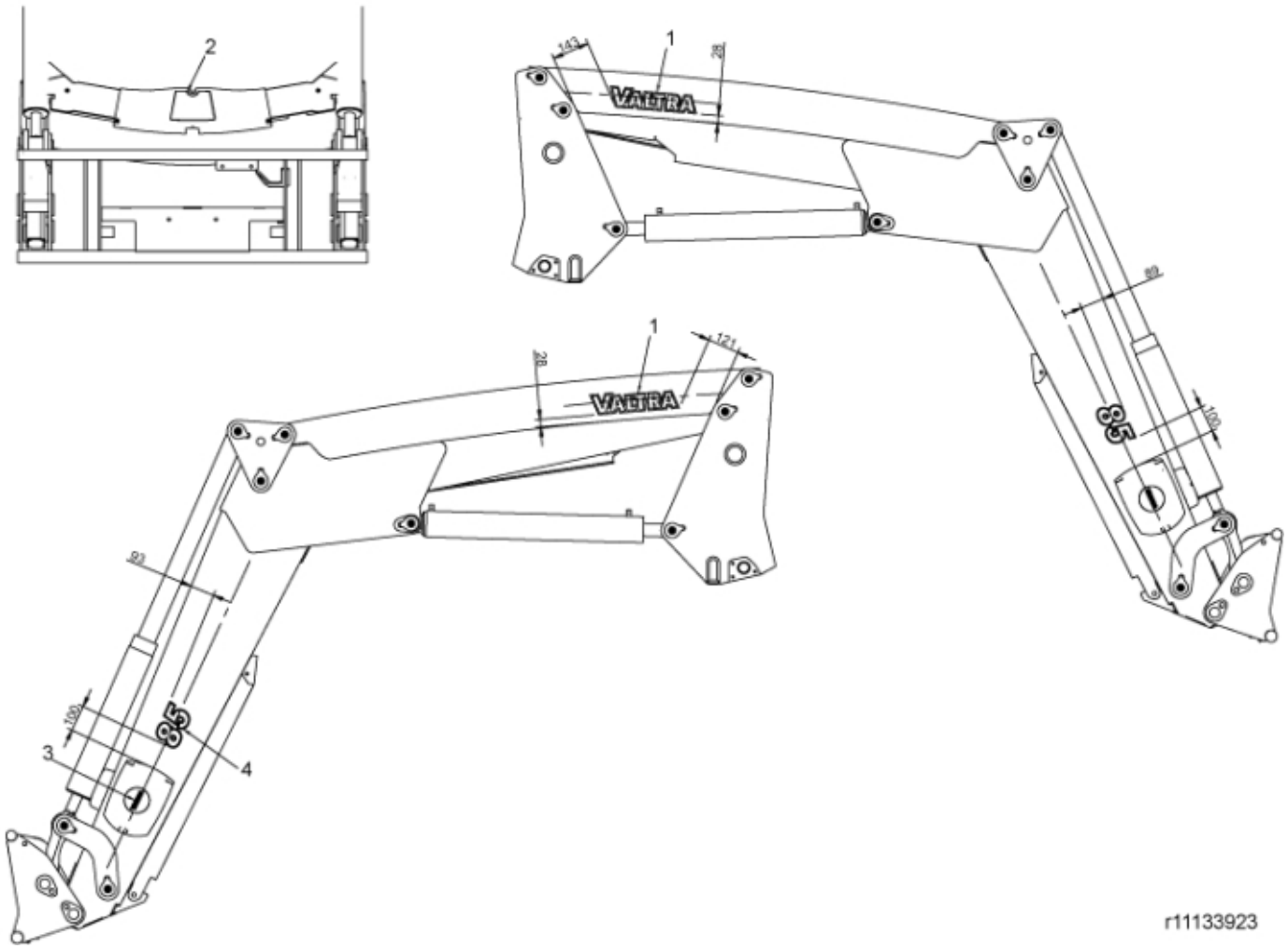
2
1
143
29
VALTRA
82
85
100
1
121
28
VALTRA
83
100
85
3
4
r11133923

© 2025 Jost

Part assemblies Decal kit Valtra 85

PartNo	Pos	Qty	Name	Specifications
11133937	1	2	Decal, Brand	
11133936	2	1 PCS	Trapezoid decal	
11133935	3	2 PCS	Decal, Circular	Valtra
11133934	4	2 PCS	Valtra 85	

© 2025 Jost