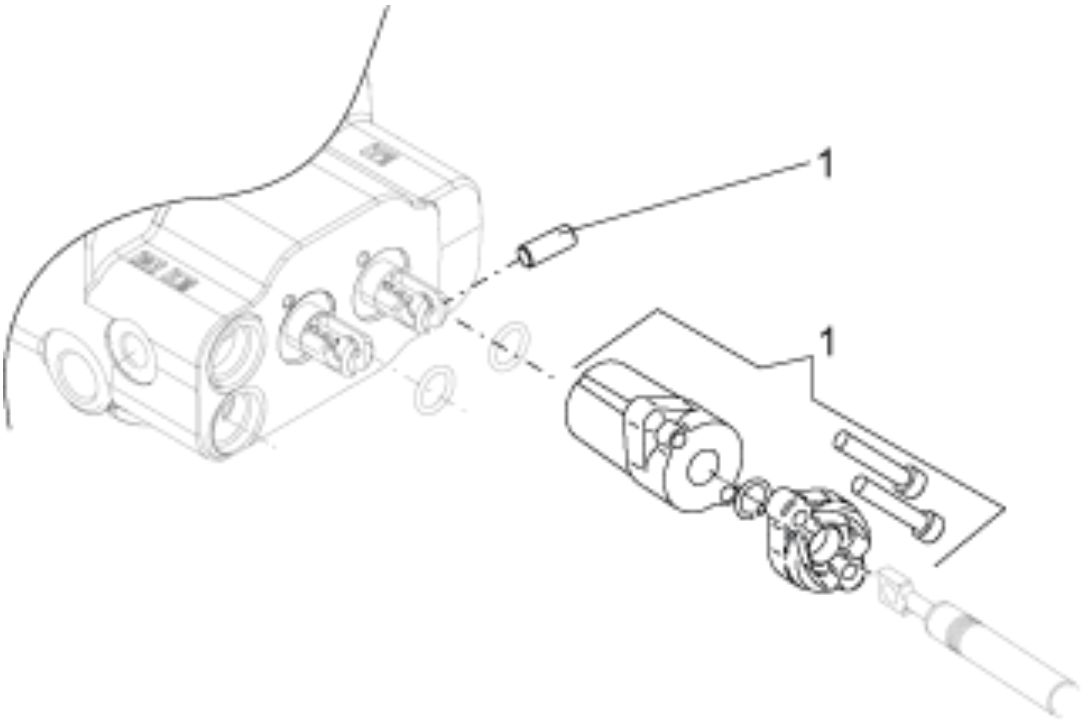

r313262

© 2025 Jost

Part assemblies	Mounting Kit
Specification	Specification: 2 pcs

PartNo	Pos	Qty	Name	Specifications
313262	1	1 PCS	Mounting Kit	2 pcs

© 2025 Jost