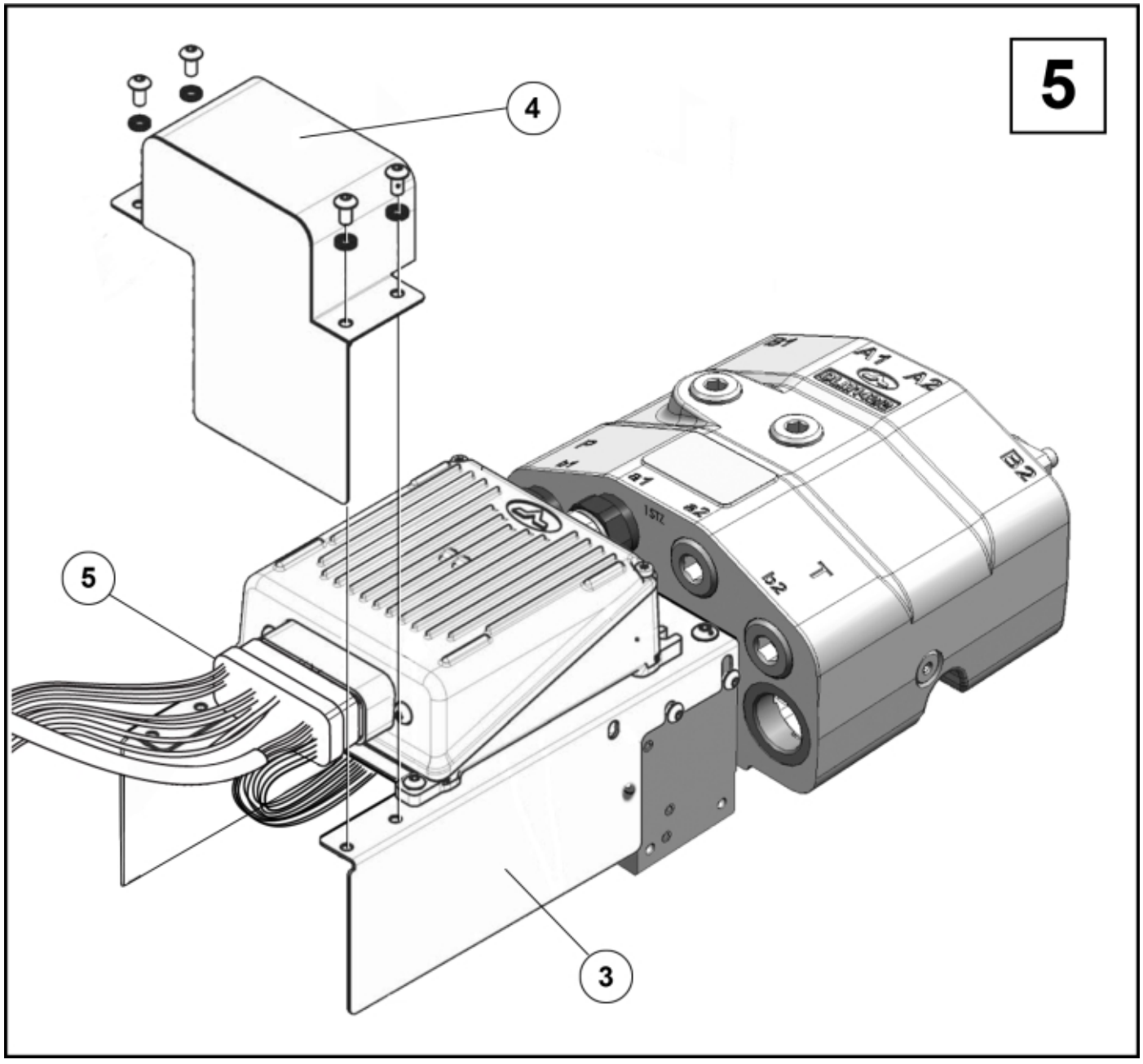

© 2025 Jost

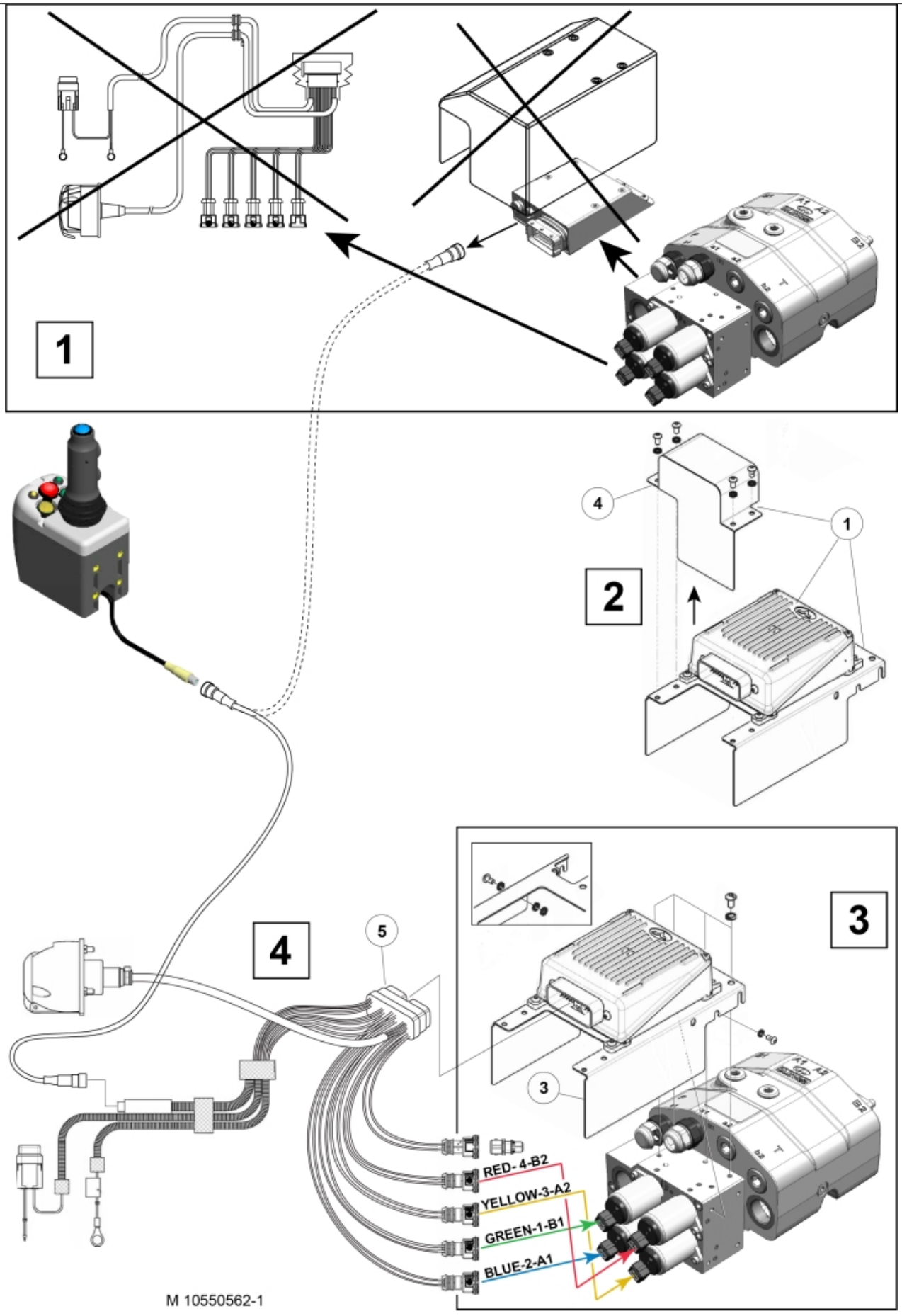

© 2025 Jost

Part assemblies	CDC2 Retro Fit kit cpl.

PartNo	Pos	Qty	Name	Specifications
10550562		1 PCS	CDC2 Retro Fit kit cpl.	
5101108	1	1 PCS	• CDC-2 Retro Fit Kit	
10550566	3	1 PCS	•• Cover	
10550567	4	1 PCS	•• Cover	
5102159	5	1	• Electr. Cable	

© 2025 Jost