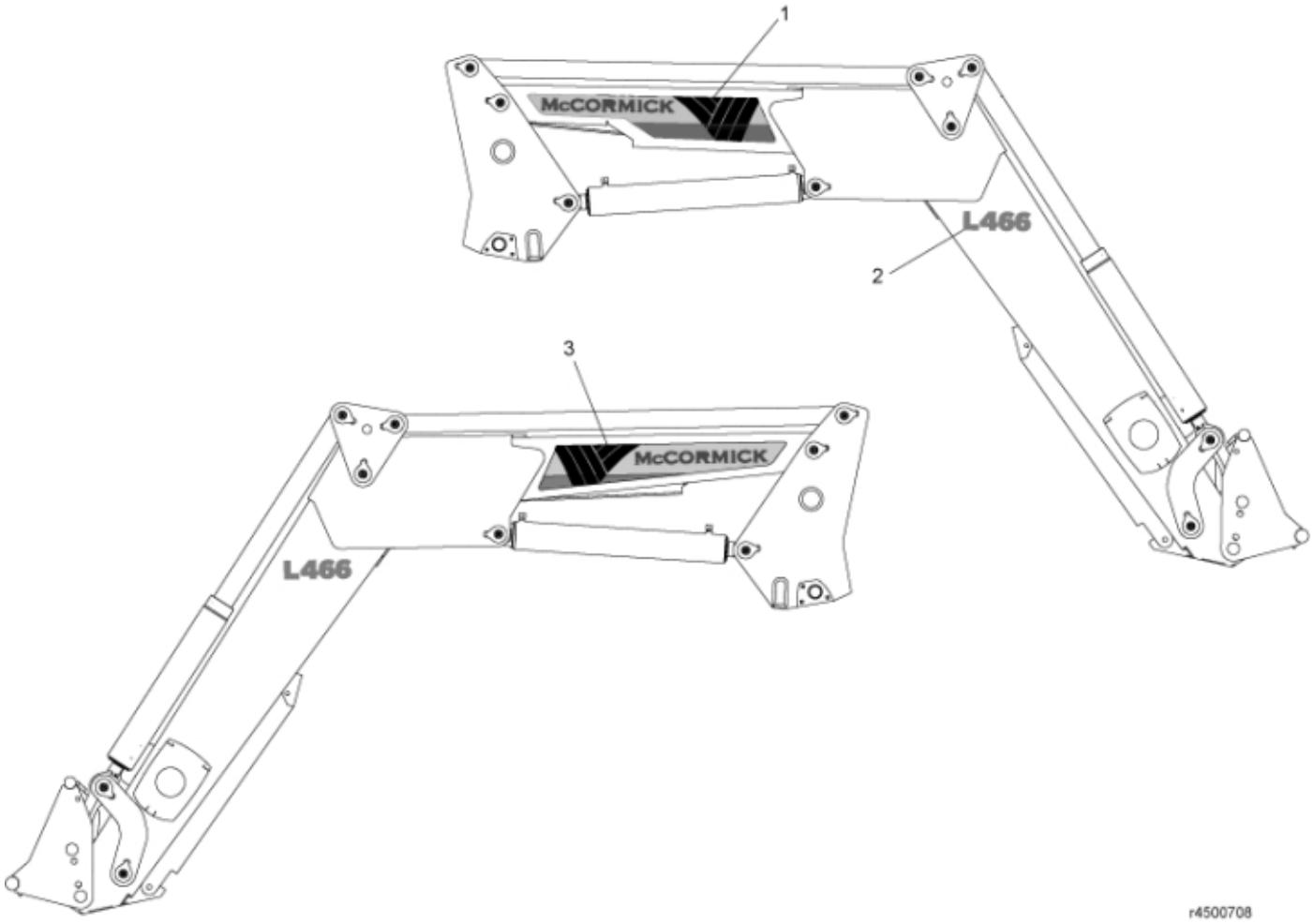

© 2025 Jost

Part assemblies Decal kit L466

PartNo	Pos	Qty	Name	Specifications
11135750	1	1 PCS	Decal Brand, RH	
11135798	2	2 PCS	Decal, Model	
11135746	3	1 PCS	Decal Brand, LH	

© 2025 Jost