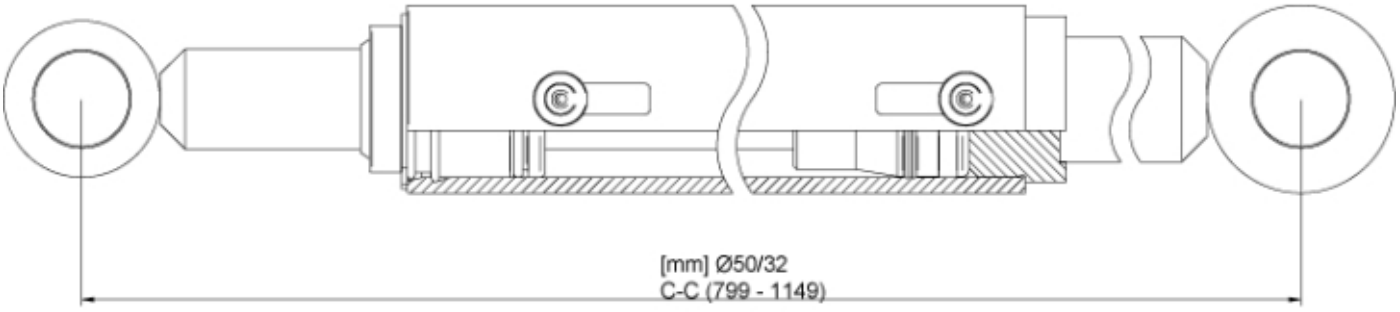

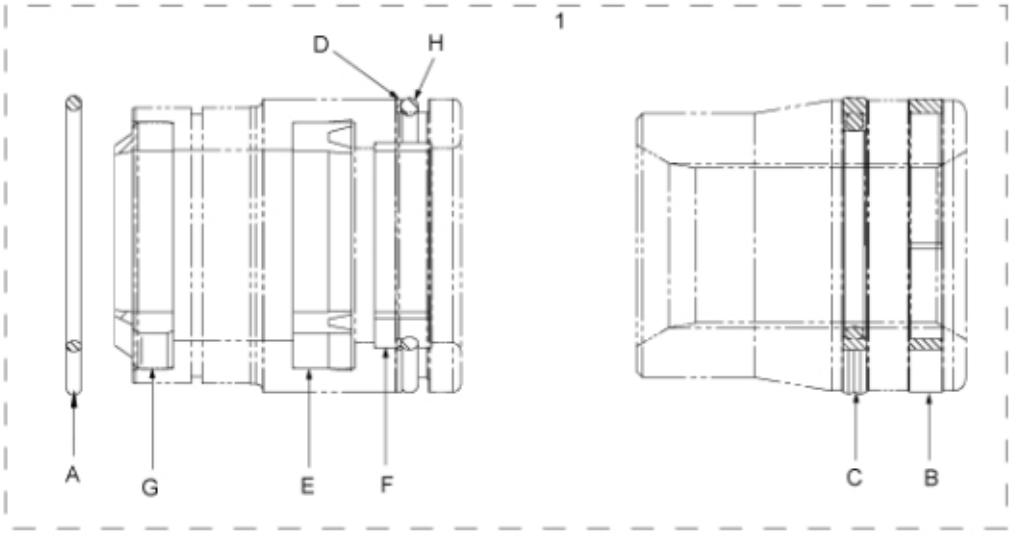

r12720810

© 2025 Jost

Description	50/32
Part assemblies	Cylinder
Specification	Specification: Glossy Black

PartNo	Pos	Qty	Name	Specifications
5034252	1	1	Seal kit	
5039035	A	1 PCS	• O-ring	46 x 2.5
5040080	B	1	• Guide ring	50 x 45 x 5.5
5040081	C	1	• Piston seal	50.6 x 39 x 4
5039043	D	1 PCS	• Support Ring	50 x 45.2 x 1
5040057	E	1	• Seal kit	43 x 31 x 10
5040058	F	1	• Guide ring	35 x 9.6
5040059	G	1	• Wiper	42 x 31 x 10
5039042	H	1 PCS	• O-ring	44.2 x 3

© 2025 Jost