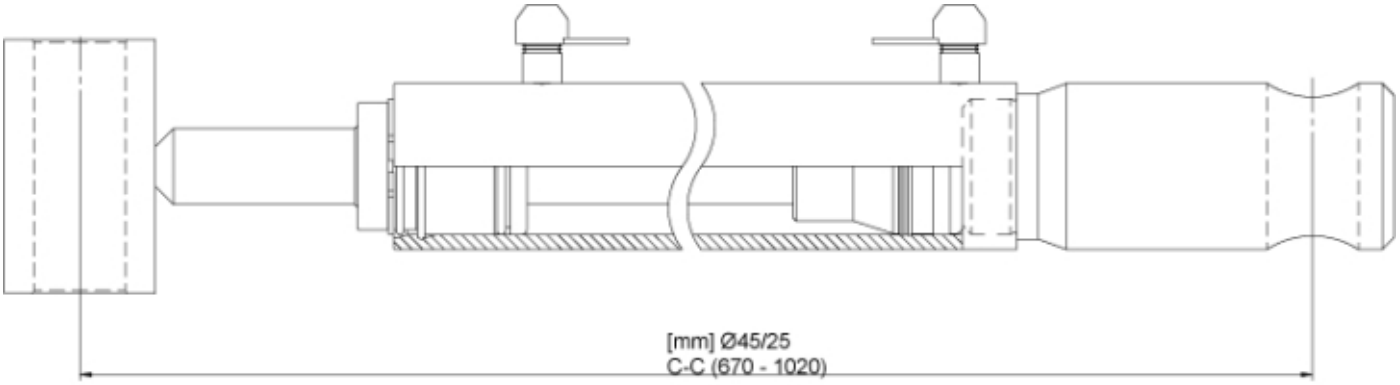

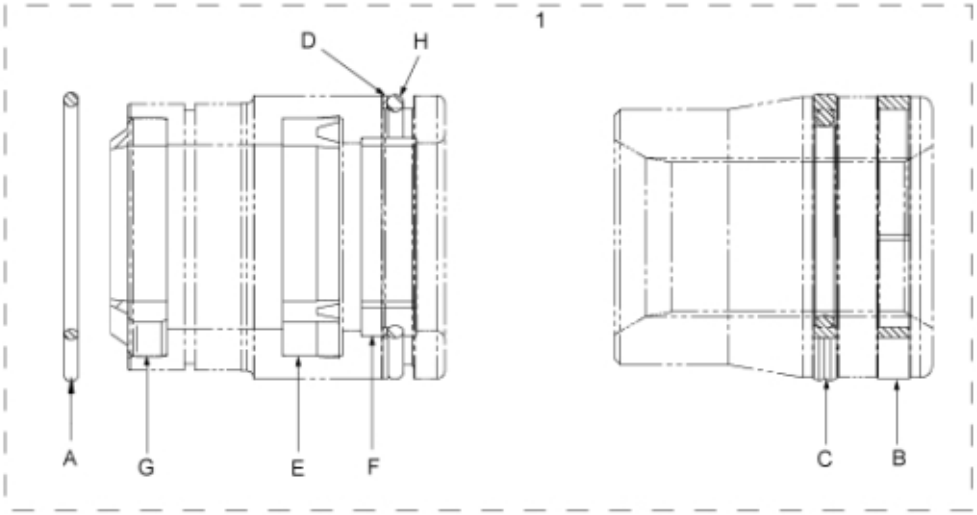

r12719410

© 2025 Jost

Description	45/25
Part assemblies	Cylinder

PartNo	Pos	Qty	Name	Specifications
5034250	1	1	Seal kit	
5039039	A	1 PCS	• O-ring	40 x 2.5
5040072	B	1	• Guide ring	45 x 40 x 5.5
5040073	C	1	• Piston seal	45.6 x 34 x 4
5039036	D	1 PCS	• Support Ring	45 x 40.2 x 1
5040083	E	1	• Seal kit	33 x 25 x 5.7
5040076	F	1	• Guide ring	28 x 25 x 9.6
5040084	G	1	• Wiper	33 x 25 x 4
5039037	H	1 PCS	• O-ring	39.2 x 3

© 2025 Jost