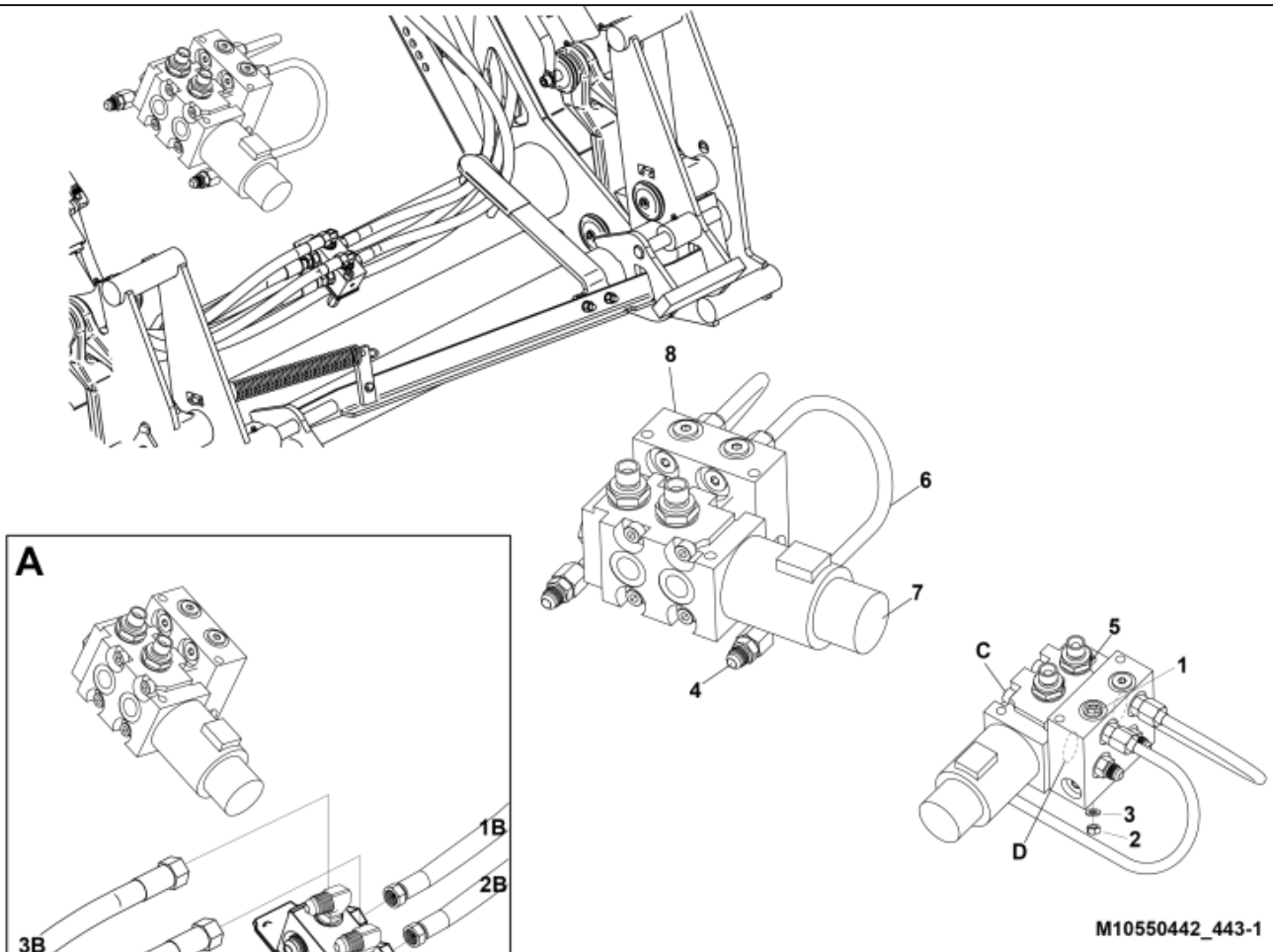
8
6
7
4
C
5
1
3
2
D
M10550442_443-1

A
1B
2B
3B
4B
5B
6B

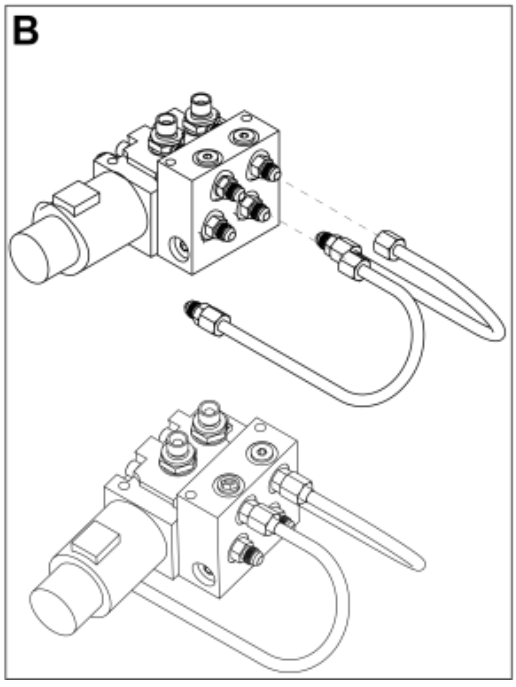
B

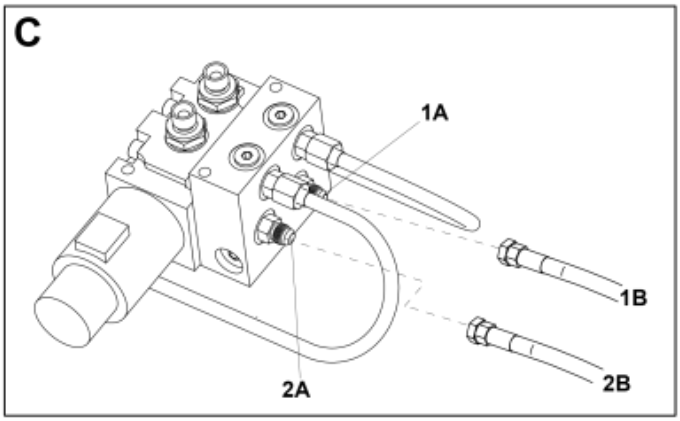
C
1A
1B
2A
2B

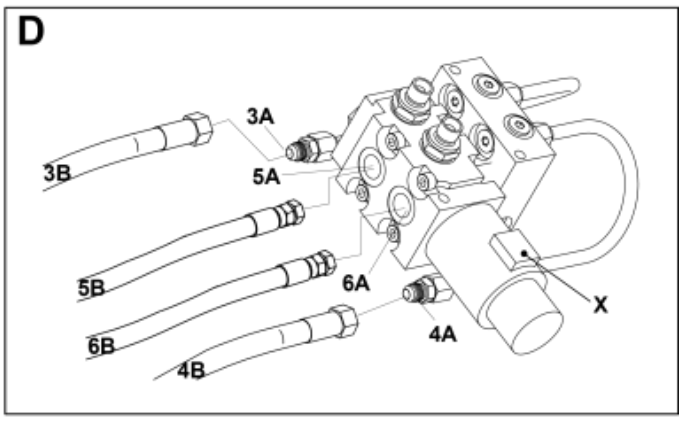
D
3A
3B
5A
5B
6A
6B
4A
4B
X

© 2025 Jost

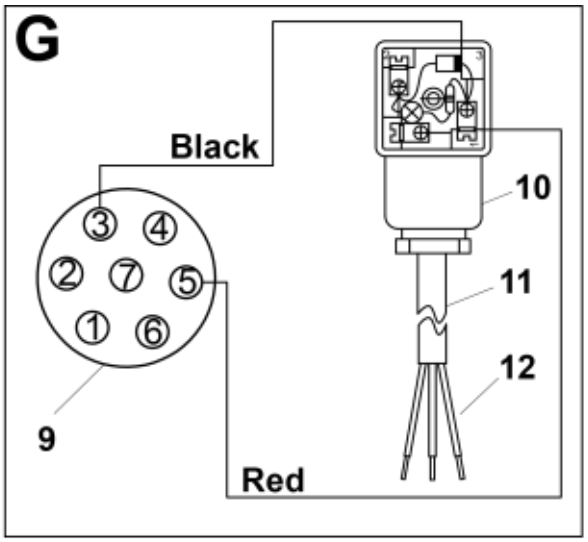

M10550442_443-2

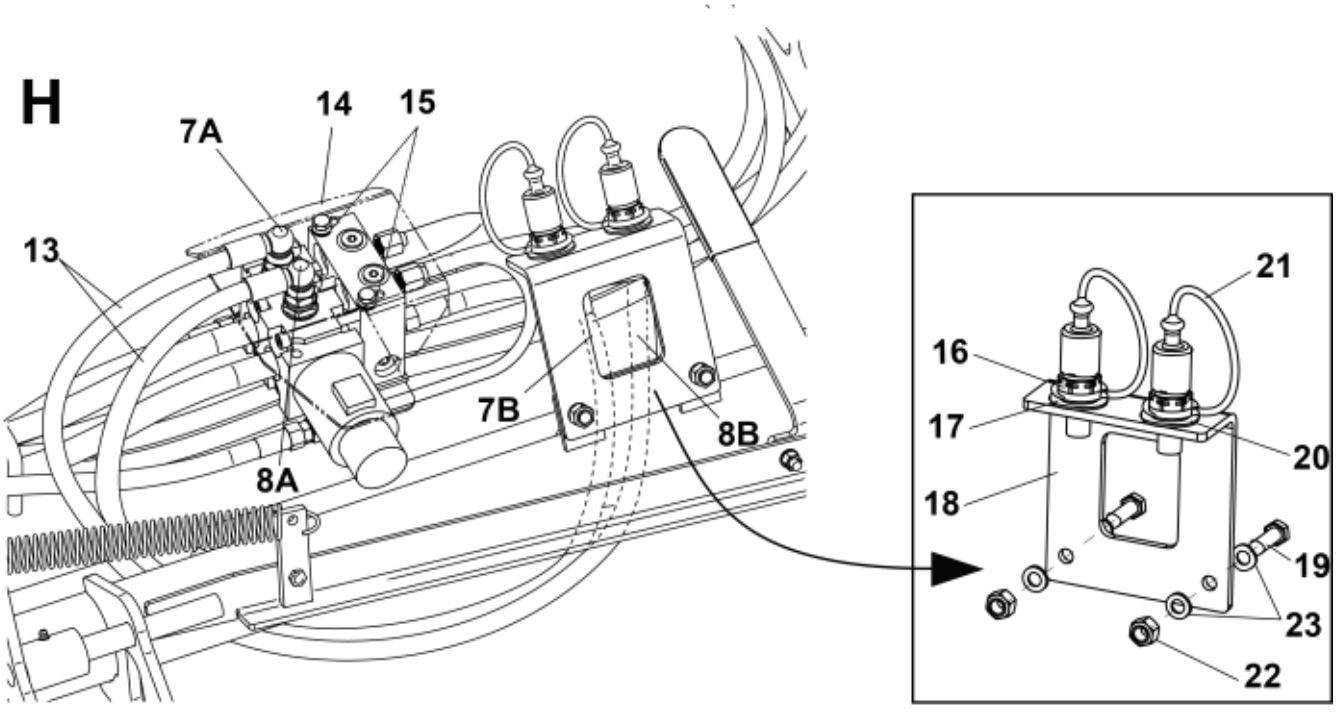

© 2025 Jost

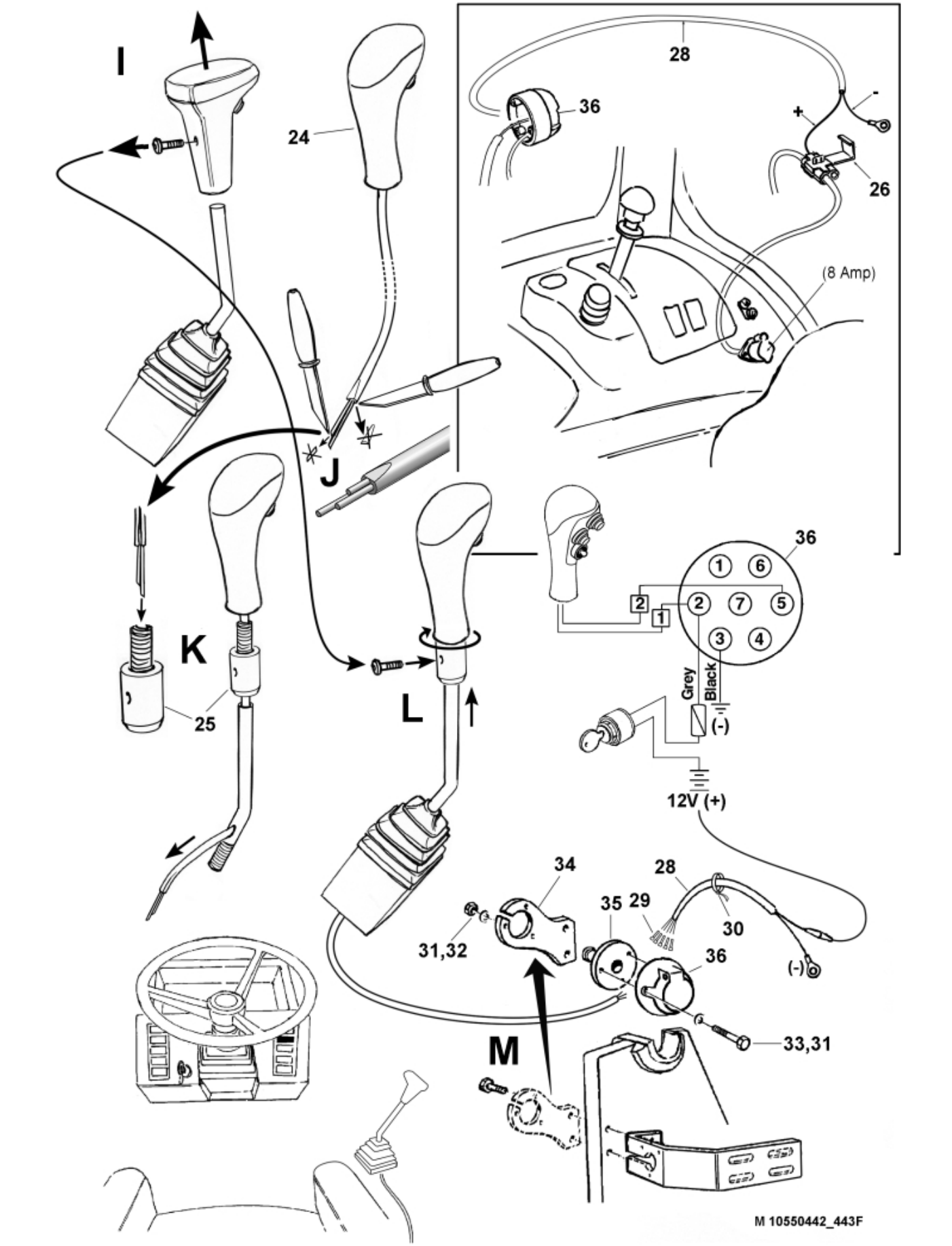
I
24
28
36
+
-
26
(8 Amp)
J
K
25
L
36
1
6
2
7
5
3
4
Grey
Black
(-)
12V (+)
34
28
35
29
30
31,32
36
(-)
M
33,31
M 10550442_443F

© 2025 Jost

Part assemblies 3rd service - Wire NSL

PartNo	Pos	Qty	Name	Specifications
10550442F			3rd service - Wire NSL	
5002978	1	2	• Screw	M6S 8x129
5011553	2	1	• Nut	M6M M8 Loc-king
5013101	3	1	• Washer	BRB 8,4 x 16
5028109	4	2	• Adaptor	JIC 9/16"
5028151	5	2	• Adaptor	3/4" ORB - 3/8 BSP
5221381	6	2 PCS	• Tube	
5221387	7	1	• Control valve	
5004054	C	4	•• Screw	MC6S M8x80
5039034	D	2	•• O-ring	
10550406	8	1 PCS	• Diverter valve cpl.	
5024379	9	1	• Connector	
5024376	10	1	• Connector	
5102152	11	1	• Cable	L=4400mm
5024205	12	1	• Cable	
1103117	13	2	• Hose	3/8"
5221954	14	1 PCS	• Protection plate	
5013101	15	4	• Washer	BRB 8,4 x 16
5044940	16	2	• Coupling	ISO-A 1/2" Male - G3/8
5022159	17	1	• Washer, blue	
5221946	18	1 PCS	• Bracket	
5002077	19	3	• Screw	M6S 10x30
5022157	20	1	• Washer, red	
5044129	21	2	• Dust Cover	1/2" Male
5011554	22	2	• Nut	Loc-King M10
5013102	23	4	• Washer	BRB 10 x 18 x 2
717565006		1	• Electric mounting kit	
5020956	24	1 PCS	•• Handle	
10388452	25	1	•• Sleeve	
5024025	26	1	•• Jointing clamp	
313497		1	• Electric mounting kit	
313476	28	1	•• Electr. Cable	
5103017	29	1	•• Cable terminal	
5033621	30	5	•• Cable tie	4.6x150
5013112	31	6	•• Washer	5,3x10x1,5
5011051	32	3	•• Nut	M6M 5
5004914	33	3	•• Screw	M5x40
5201142	34	1	•• Connector Support	
5102039	35	1	•• Rubber boot	For caravan connector
5024378	36	1	• Connector, female	7-Pole

© 2025 Jost