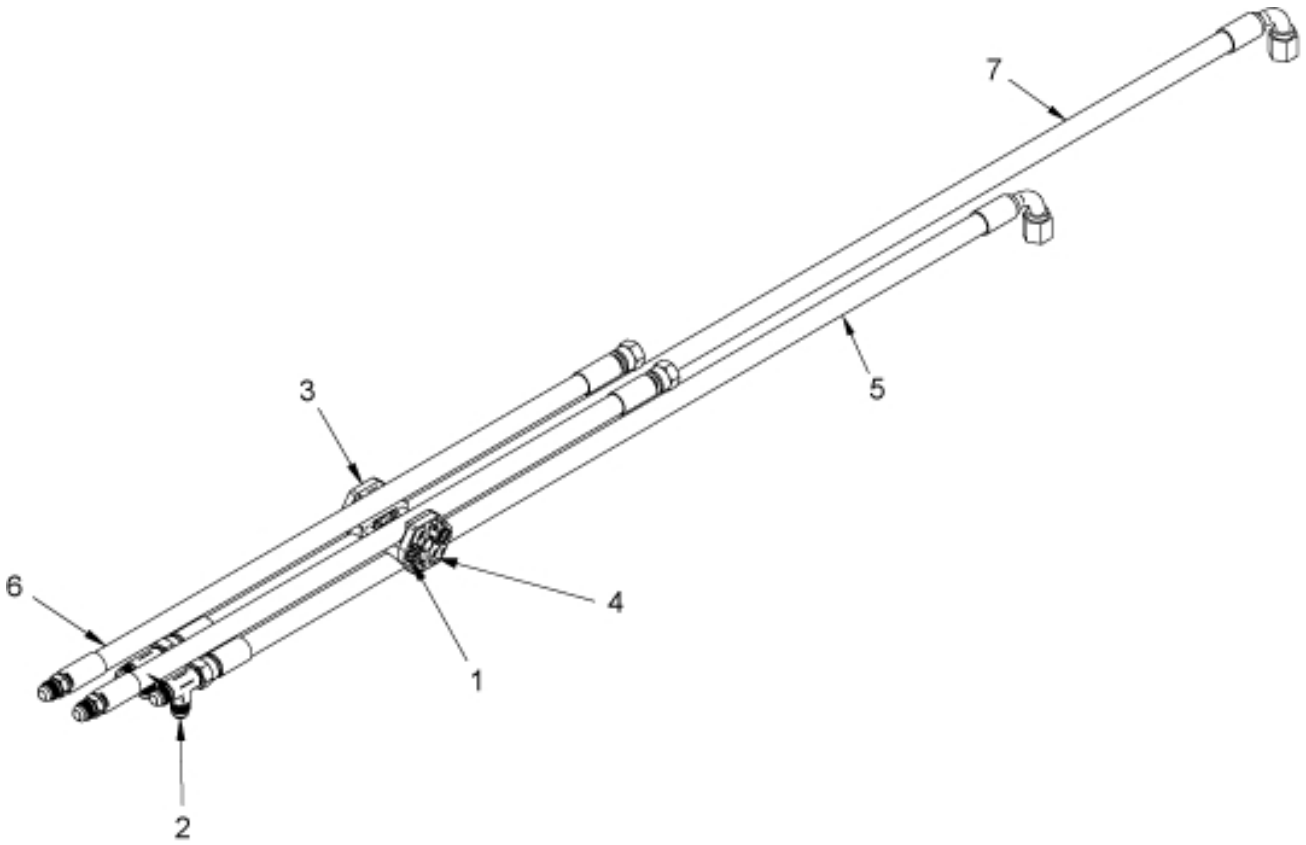

r9032110

© 2025 Jost

Part assemblies Main hose kit

PartNo	Pos	Qty	Name	Specifications
5004030	1	2	Screw	MC6S M6 x 45
5028077	2	2	Adaptor	
20708137	3	2	Nut	M6 FZB, 708137
5221880	4	2	Hose clamp	
9031829	5	1 PCS	Hose	3/8" L=2820mm
9032113	6	2 PCS	Hose	3/8" L=1700mm
9031832	7	1 PCS	Hose	3/8" L=3250mm

© 2025 Jost