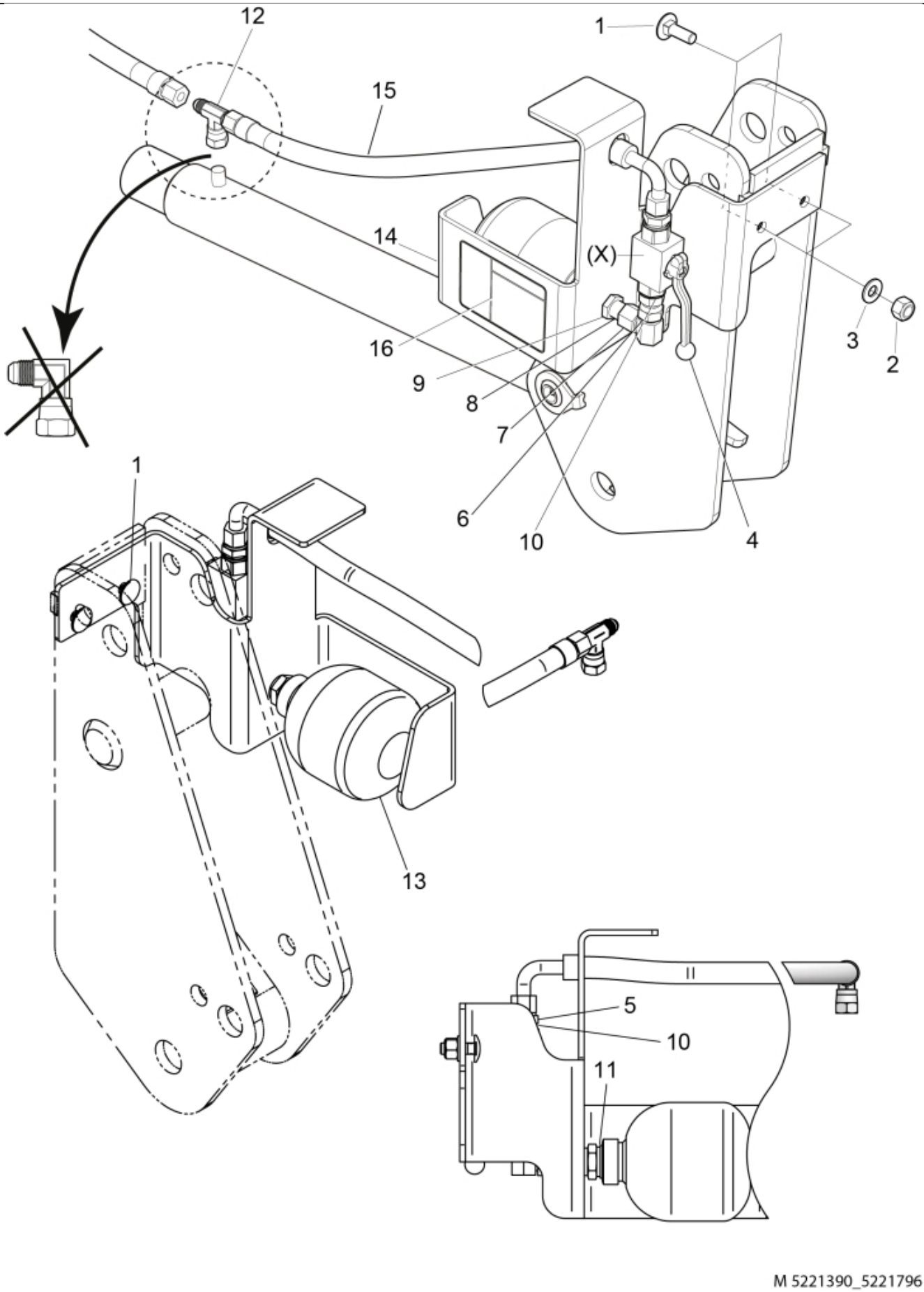

M 5221390_5221796

© 2025 Jost

Part assemblies SoftDrive kit

PartNo	Pos	Qty	Name	Specifications
5221796		1 PCS	SoftDrive kit	
5006002	1	2	Screw	MVBF 10x30
5011554	2	2	Nut	Loc-King M10
5013110	3	2	Washer	BRB 10.5x22x2
5034143		1 PCS	SoftDrive	
513005	4	1	• Shut-off valve	R3/8"
1120010	5	1	• Adaptor	
1120081	6	1	• Adaptor	3/8" BSP
1120099	7	1	• Adaptor	3/8" BSP 90°
1120158	8	1	• Adaptor	R 1/2” - R 3/8”
5011756	9	1	• Nut	3/8"
5013852	10	2	• Dowty washer	Tredo 3/8"
5013853	11	1	• Dowty washer	Tredo 1/2", Part is included in kit 60007907 Hose cpl., 9032177 Hose cpl.
5028105	12	1	• Adaptor	
5045140	13	1	• Accumulator	
5221930	14	1 PCS	• Support	
9031897	15	1 PCS	• Hose	3/8" L=880mm
11135076	16	1 PCS	• Decal, Danger	

© 2025 Jost