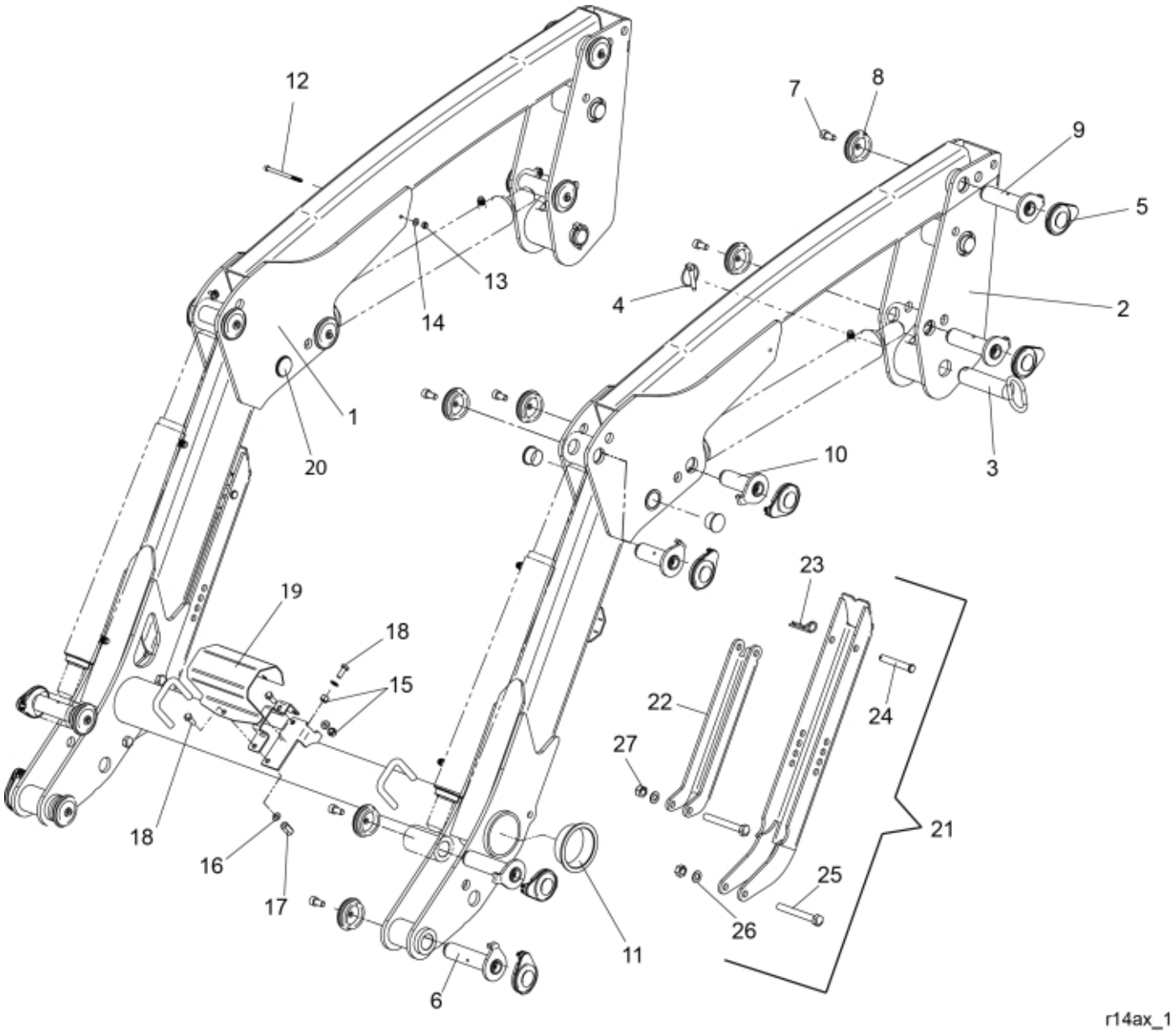
12
7
8
9
5
13
14
4
2
1
20
10
3
23
19
18
15
22
24
27
18
16
17
21
25
26
11
6
r14ax_1

© 2025 Jost

Part assemblies Loader beam

PartNo	Pos	Qty	Name	Specifications
5221713-1	1	1	Loader beam	Glossy Black
5221764-1	2	2	Bearing box	Glossy Black
5221950	3	2	Locking Pin	
5017002	4	2	Linch pin	
5215121-1	5	12	Plastic cover	Glossy Black
9020100	6	4	Pivot Pin	D=30, L=122mm
5050608	7	12	Screw	MC6S M10x20 Loc
5215131	8	12	Locking cover	
9020105	9	4	Pivot Pin	D=30, L=113mm
60018050	10	4	Pivot Pin	D=30, L=84mm
5221165	11	2	Plastic cover	
5004955	12	1	Screw	MC6S 6x85
5011552	13	1	Locking nut	M6 Locking
5013111	14	1	Washer	BRB 6,4 x 14
5011553	15	2	Nut	M6M M8 Loc-king
5013101	16	3	Washer	BRB 8,4 x 16
5011928	17	1 PCS	Nut	M8
5002051	18	3	Screw	M6S 8 x 20
5221953	19	1 PCS	Protection plate	
5221904	20	4 PCS	Plastic cover	
5221791-1	21	2	Support leg	Glossy Black
5221497-1	22	1	• Stay	Glossy Black
5221186	23	1	• Pin clip	□ 12x120
5021955	24	1	• Locking Pin	
5002114	25	2	• Screw	M6S 12x100
5013103	26	2	• Washer	BRB 13x24
5011911	27	2	• Nut	M12

© 2025 Jost