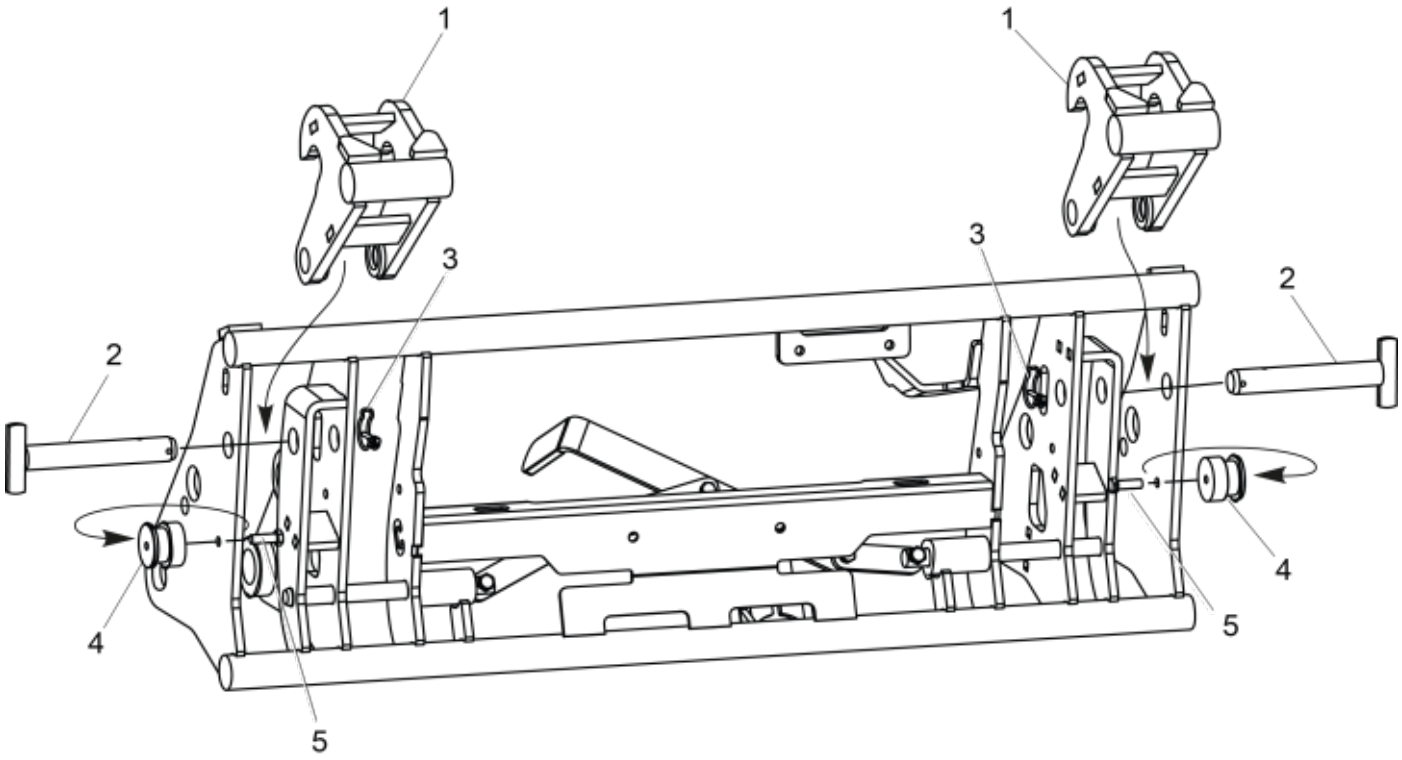

M 5220720

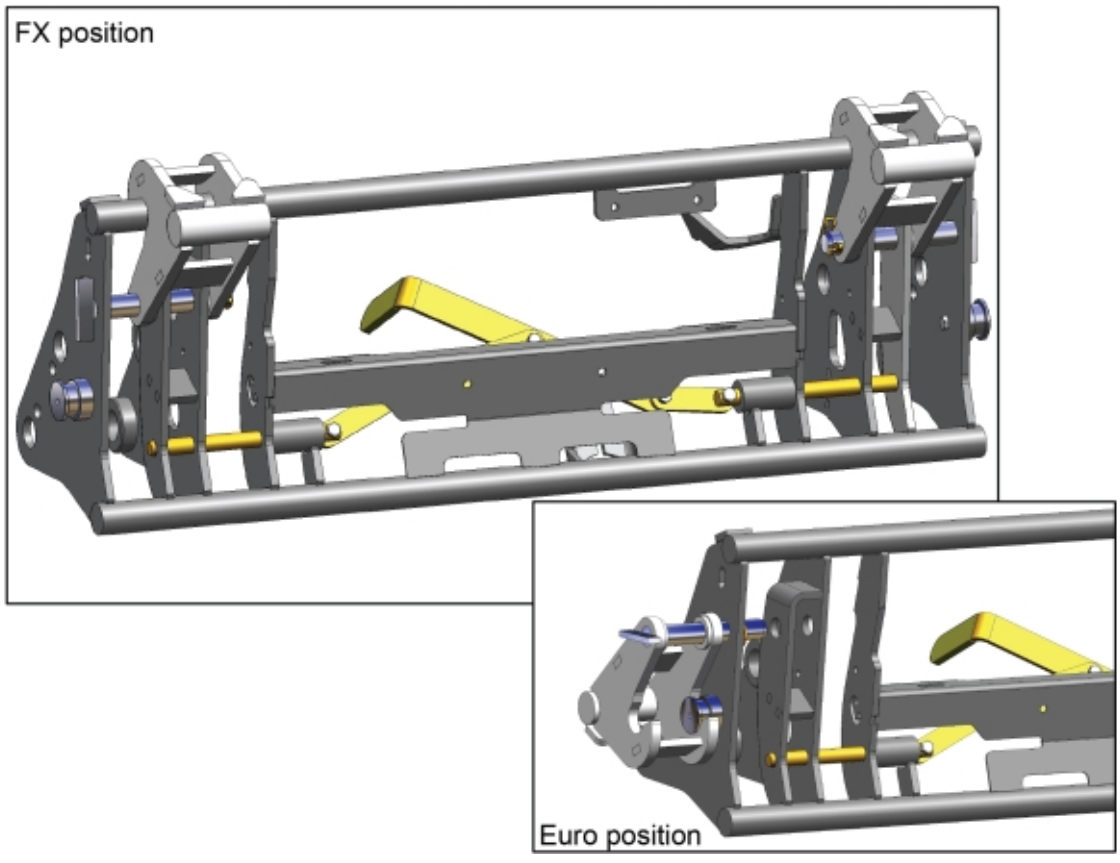

© 2025 Jost

Part assemblies FX Adaptor Kit

PartNo	Pos	Qty	Name	Specifications
5220720		1 PCS	FX Adaptor Kit	
5220710	1	2 PCS	• FX Adaptor	
5220719	2	2	• Locking Pin	
5006027	3	2	• Retaining ring	
5220717	4	2 PCS	• Sleeve	
5002077	5	2	• Screw	M6S 10x30

© 2025 Jost