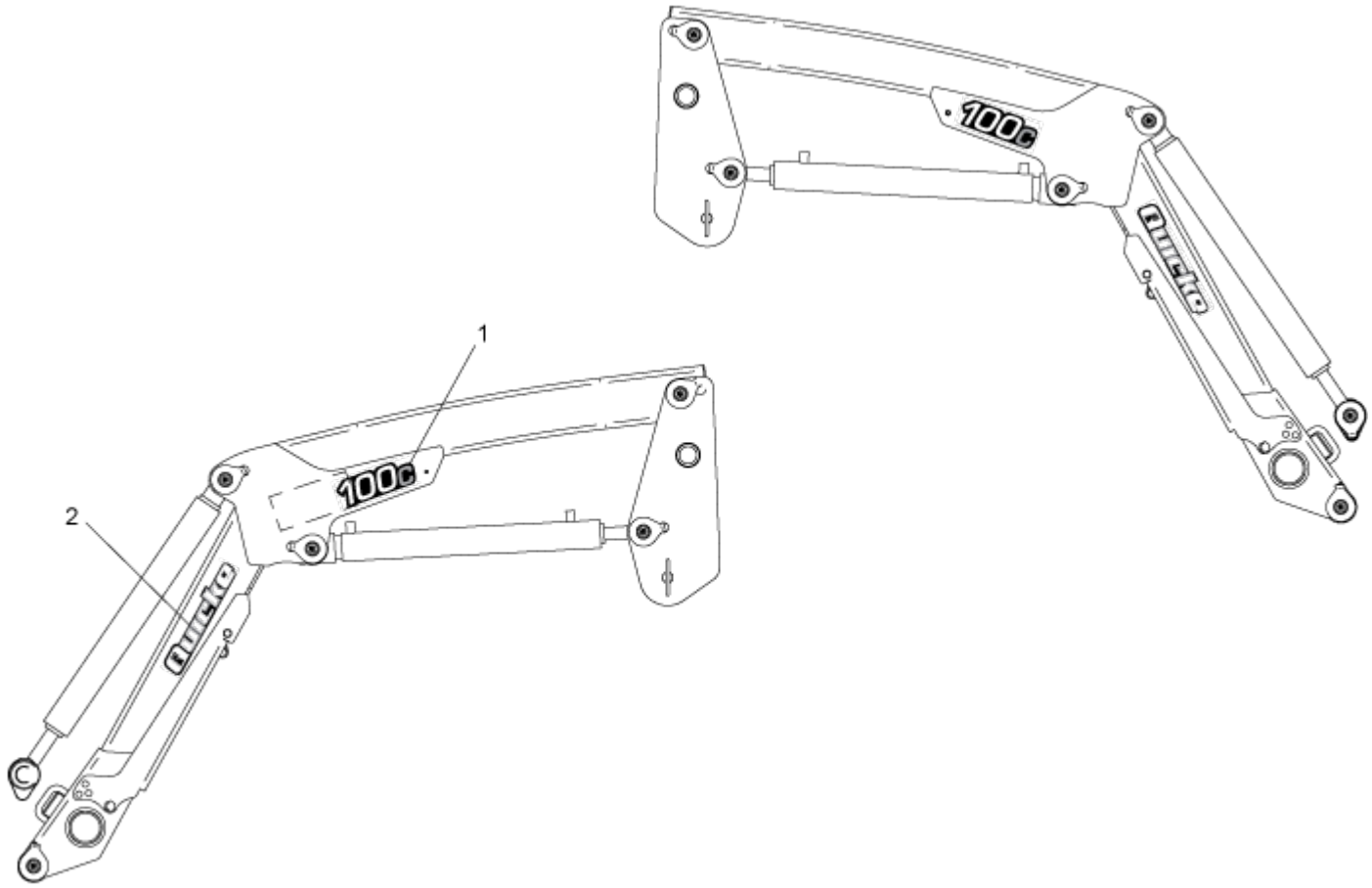

r4500662

© 2025 Jost

Part assemblies	Decal kit 100c

PartNo	Pos	Qty	Name	Specifications
11135571	1	2 PCS	Decal, Model	100c
11135610	2	2 PCS	Decal, Brand	

© 2025 Jost