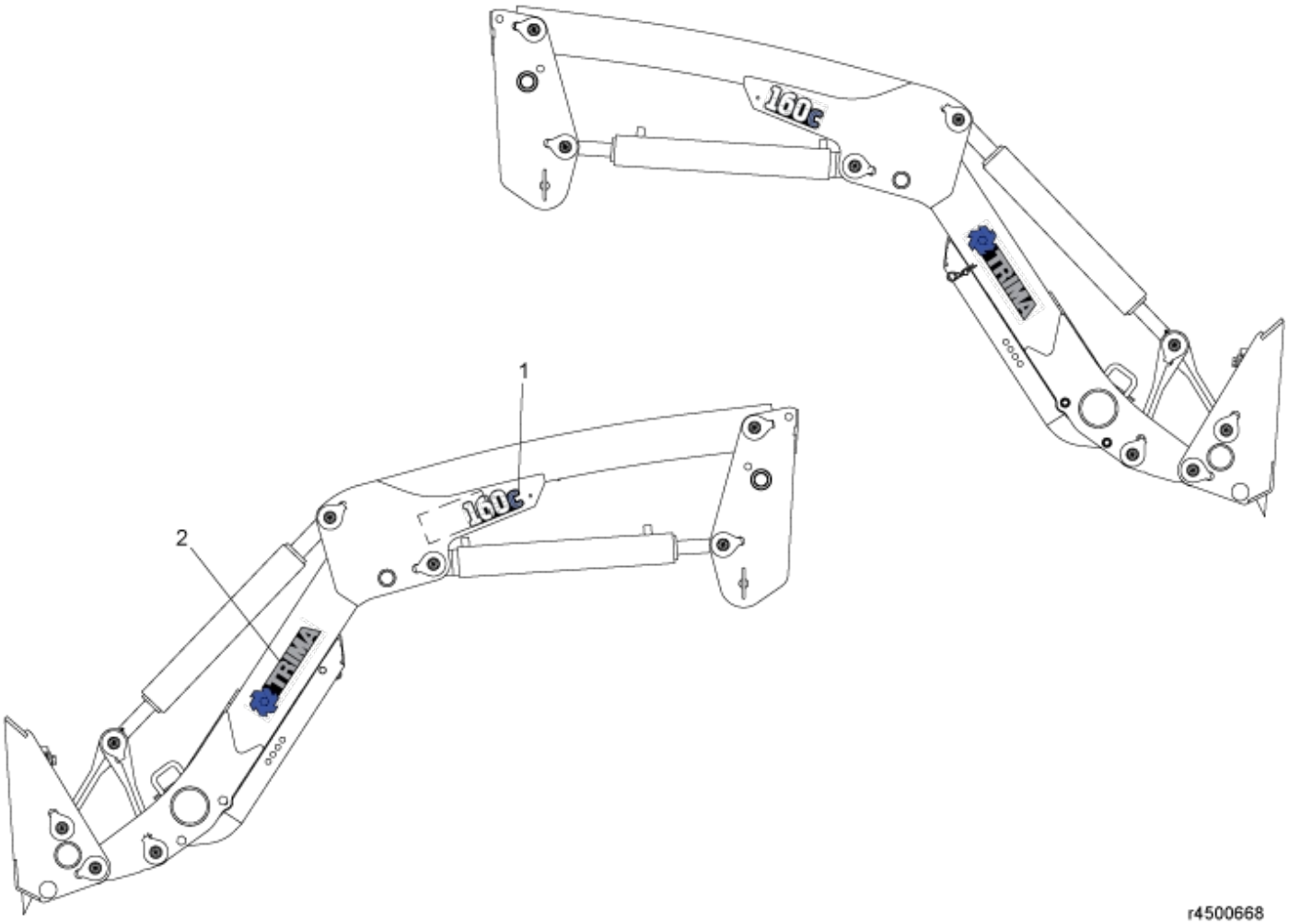

© 2025 Jost

Part assemblies	Decal kit 160c

PartNo	Pos	Qty	Name	Specifications
11135587	1	2 PCS	Decal, Model	
11135612	2	2 PCS	Decal, Brand	

© 2025 Jost