Loader 100

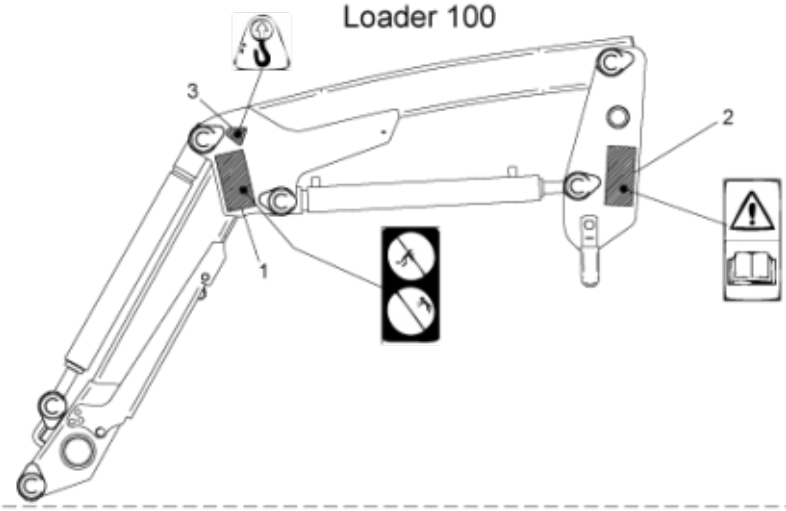

Loader 140

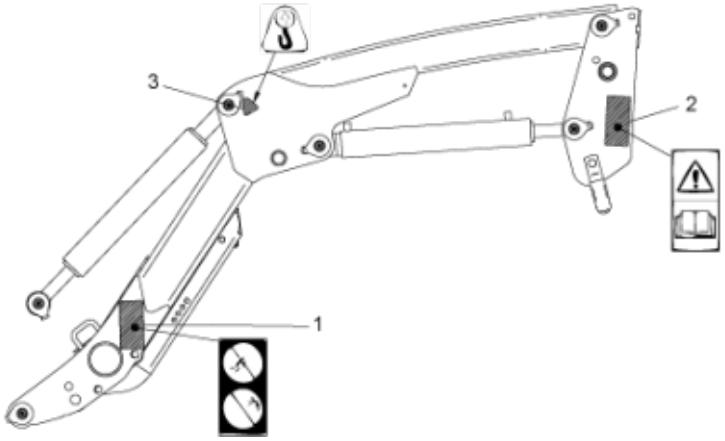

r4500670

© 2025 Jost

Part assemblies	Decal kit, Warning

PartNo	Pos	Qty	Name	Specifications
1123673	1	2	Warning decal	
1123674	2	1	Warning decal	"Read manual"
1123676	3	2	Decal, lift	

© 2025 Jost